Motors | Automation | Energy | Transmission & Distribution | Coatings

W22

Three-Phase Electric Motor

Technical Catalogue
European Market

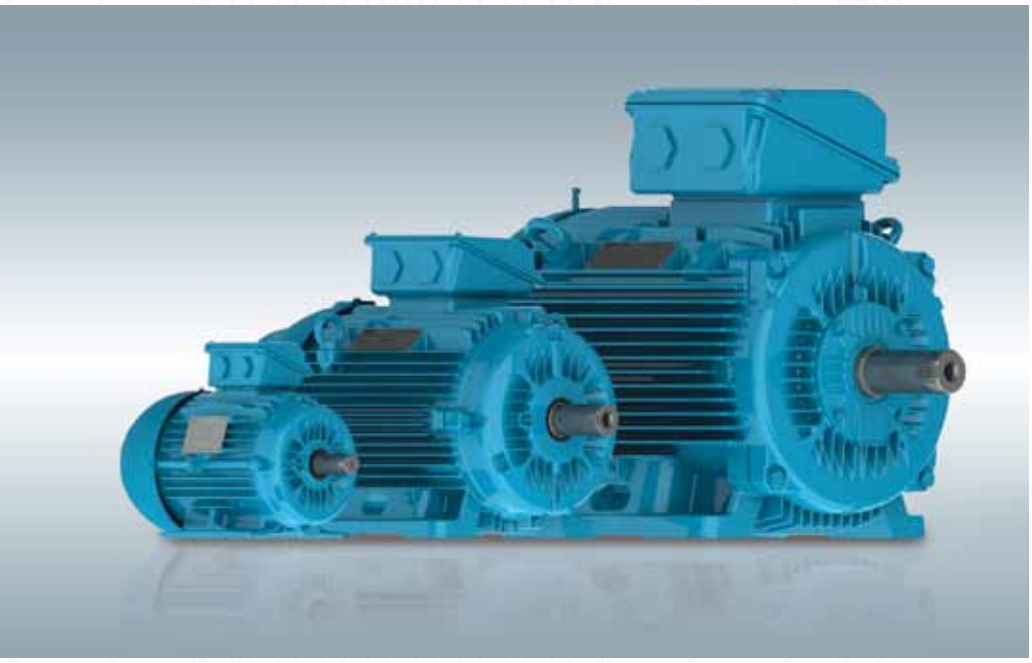

W22 Line – High Efficiency Motors

The increasing demand for electrical energy to sustain global development requires consistent heavy investments in power supply generation. However, in addition to complex medium and long term planning, these investments rely on natural resources, which are becoming depleted due to constant pressures upon the environment. The best strategy, therefore, to maintain energy supply in the short term is to avoid wastage and increase energy efficiency. Electric motors play a major role in this strategy; since around 40% of global energy demand is estimated to be related to electric motor applications. Consequently, any initiatives to increase energy efficiency, by using high efficiency electric motors and frequency inverters, are to be welcomed, as they can make a real contribution to reductions in global energy demand.

At the same time as efficiency initiatives make an impact in traditional market sectors, the application of new technologies in emerging sectors is resulting in profound changes in the way that electric motors are applied and controlled. By integrating these changes together with the demands for increased energy efficiency, WEG has taken up the challenge and produced a new design of high efficiency motor; one that exceeds the performance of WEG's existing W21 motor line, which is recognised worldwide for its quality, reliability and efficiency.

Using the latest generation of computerised tools, such as structural analysis software (finite element analysis) and computer fluid dynamics, as well as electrical design optimisation software, an innovative – next generation - product has been developed: the W22 motor.

Several key objectives have been achieved in the design of the W22 motor:

- Reduction of noise and vibration levels
- Increased energy efficiency and reduced thermal footprint
- Easy maintenance
- Compatibility with present & future generations of frequency inverters
- Flexible and modular design

The WEG W22 is what the industrial world needs today, to help sustain its future – tomorrow. Visit www.weg22ways.net to find out more.

- Contact us for a FREE copy of our 22 Ways to Improve Motor Productivity and Prolong Lifespan booklet
- Call: 0800 862 0375 Email: 22ways-europe@weg.net

Frame 63 to 112

Frame 132 to 200

Frame 225 to 355

Sustainability and Carbon Emission reduction through Premium Efficiency Motors

The Premium Efficiency (IE3) level established in IEC 60034-30: 2008 is considered the highest efficiency class which a squirrel cage induction motor can achieve whilst remaining economically viable.
It is also the optimum solution to increase the efficiency of an existing application through direct replacement.
So, why have Premium Efficiency motors not become the Industry standard?
It may be argued that premium efficiency motors are also premium in price when comparing against standard efficiency (IE1) and high efficiency (IE2) motors.
Whilst this is not strictly untrue, it should be appreciated when considering their lifetime that the cost of acquisition typically represents only 1% of the total cost of ownership of an electric motor. In contrast, the associated energy savings provided by premium efficiency motors far outweigh this additional investment in purchase price.

The reduction in CO_2 emissions is one of the direct consequences, and therefore benefits, of increasing efficiency in industry.
For example, according to the guidelines set out by the International Energy Agency (IEA) of 504 kg of CO_2 per 1,000kWh, it is possible to reduce CO_2 emissions by approximately 1,000 kg per year with one 3 kW premium efficiency motor and by 25,000 kg per year with a 250 kW premium efficiency motor, when compared against equivalent standard efficiency (IE1) machines.

Go to our website at www.weg.net to check the potential reduction in CO_2 emissions and the return on investment of W22 Premium Efficiency motors.
The W22 line from WEG is the first complete range of IE3 motors available to Industry...

...we call it **WEGnology**

Minimum Energy Performance Standards – Europe

Increasingly, the World seeks a path of sustainability and new ways to reduce energy consumption.
A significant percentage of the electrical energy utilized in facilities around the World is consumed by electric motors. Consequently, Governments around the World are implementing Energy Efficiency Programs in order to enforce the use of high efficiency motors.
Up until 2009, Europe did not have any specific regulations relating to the energy efficiency levels of electric motors. There existed only a voluntary agreement between Manufacturers from 1998 that determined the well known efficiency bands EFF1, EFF2 and EFF3.
However, in July of 2009 the European Community introduced the regulation 640/2009 (implementing Directive 2005/32/EC) relating to the scope of supply, implementation dates and efficiency levels of electric motors sold in the European market. This directive bases the efficiency levels on the values stipulated in IEC 60034-30.

Scope

The Scope of the European Ecodesign Directive covers single speed, three-phase 50 Hz or 50/60 Hz, squirrel cage induction motors that:

- have 2 to 6 poles
- have a rated voltage U_N up to 1,000 V
- have a rated output P_N between 0.75 kW and 375 kW
- are rated on the basis of continuous duty operation

Effective dates

- from 16 June 2011, motors shall not be less efficient than the IE2 efficiency level (defined in Table 1);
- from 1 January 2015 motors with a rated output of 7.5-375 kW shall not be less efficient than the IE3 efficiency level (defined in Table 1) or meet the IE2 efficiency level and be equipped with a variable speed drive;
- from 1 January 2017 all motors with a rated output of 0.75-375 kW shall not be less efficient than the IE3 efficiency level or meet the IE2 efficiency level and be equipped with a variable speed drive.

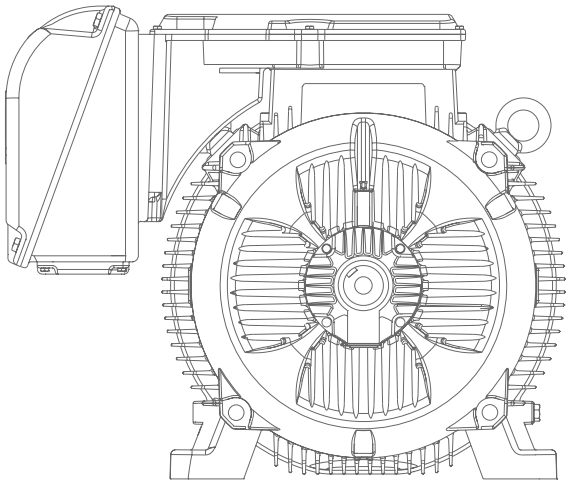

Output	IE1 - Standard Efficiency			IE2 - High Efficiency			IE3 - Premium Efficiency		
	Poles			Poles			Poles		
kW	2	4	6	2	4	6	2	4	6
0.75	72.1	72.1	70.0	77.4	79.6	75.9	80.7	82.5	78.9
1.1	75.0	75.0	72.9	79.6	81.4	78.1	82.7	84.1	81.0
1.5	77.2	77.2	75.2	81.3	82.8	79.8	84.2	85.3	82.5
2.2	79.7	79.7	77.7	83.2	84.3	81.8	85.9	86.7	84.3
3	81.5	81.5	79.7	84.6	85.5	83.3	87.1	87.7	85.6
4	83.1	83.1	81.4	85.8	86.6	84.6	88.1	88.6	86.8
5.5	84.7	84.7	83.1	87.0	87.7	86.0	89.2	89.6	88.0
7.5	86.0	86.0	84.7	88.1	88.7	87.2	90.1	90.4	89.1
11	87.0	87.6	86.4	89.4	89.8	88.7	91.2	91.4	90.3
15	88.7	88.7	87.7	90.3	90.6	89.7	91.9	92.1	91.2
18.5	89.3	89.3	88.6	90.9	91.2	90.4	92.4	92.6	91.7
22	89.9	89.9	89.2	91.3	91.6	90.9	92.7	93.0	92.2
30	90.7	90.7	90.2	92.0	92.3	91.7	93.3	93.6	92.9
37	91.2	91.2	90.8	92.5	92.7	92.2	93.7	93.9	93.3
45	91.7	91.7	91.4	92.9	93.1	92.7	94.0	94.2	93.7
55	92.1	92.1	91.9	93.2	93.5	93.1	94.3	94.6	94.1
75	92.7	92.7	92.6	93.8	94.0	93.7	94.7	95.0	94.6
90	93.0	93.0	92.9	94.1	94.2	94.0	95.0	95.2	94.9
110	93.3	93.3	93.3	94.3	94.5	94.3	95.2	95.4	95.1
132	93.5	93.5	93.5	94.6	94.7	94.6	95.4	95.6	95.4
160	93.8	93.8	93.8	94.8	94.9	94.8	95.6	95.8	95.6
200 up to 375	94.0	94.0	94.0	95.0	95.1	95.0	95.8	96.0	95.8

Table 1 - Efficiency levels

WEG can support the movement towards these high efficiency levels by offering a comprehensive range of products that exceed the IE2 and IE3 criteria detailed above. Additionally our variable speed drives are perfectly matched to our motors, affording you the the most reliable package of motor / drive products in industry.
To learn more about WEG, our products and the new Global Directives, go to www.weg.net or www.weg.net/green

Visual Index

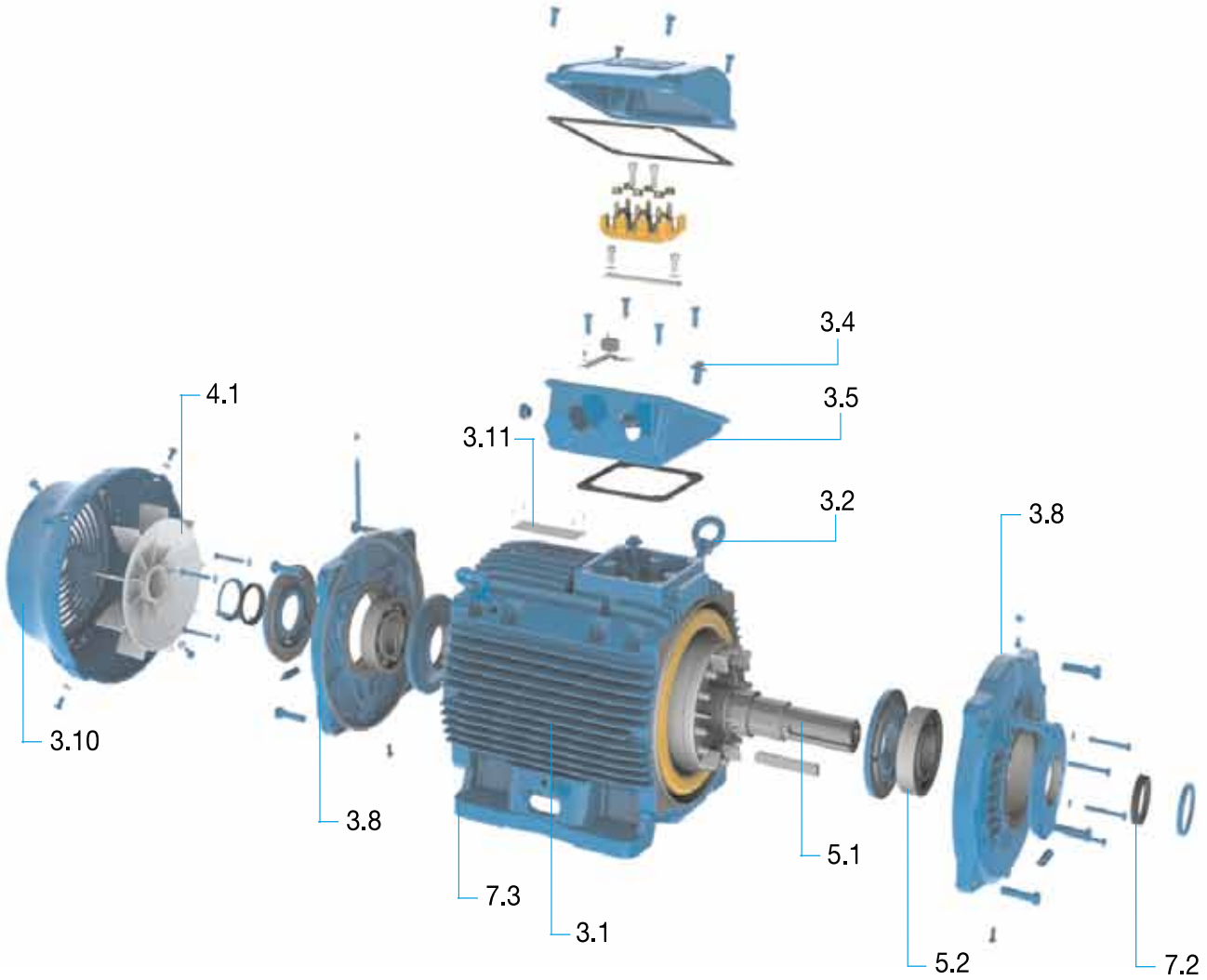

3.1	Frame	Page 9
3.2	Eyebolts	Page 10
3.4	Earth terminals	Page 10
3.5	Terminal box	Page 10
3.8	Endshields	Page 12
3.10	Fan cover	Page 12
3.11	Nameplate	Page 12
4.1	Cooling system	Page 13
5.1	Shaft	Page 14
5.2	Bearings	Page 14
7.2	Sealing system	Page 19
7.3	Painting	Page 19

Table 2 - Visual Index

Table of Contents

1. Versions available 8
2. Standards 9
3. Construction details 9
3.1 Frame 9
3.2 Eyebolts 10
3.3 Points for vibration monitoring 10
3.4 Earth terminals 10
3.5 Terminal box 10
3.6 Power supply connection leads 11
3.7 Accessory connection leads 11
3.8 Endshields 12
3.9 Drains 12
3.10 Fan cover 12
3.11 Nameplate 12
4. Cooling system and Noise level / Vibration level / Impact resistance 13
4.1 Cooling system and Noise Level 13
4.2 Vibration level 14
4.3 Impact resistance 14
5. Shaft / Bearings 14
5.1 Shaft 14
5.2 Bearings 14
5.2.1 Permissible loads 15
5.2.2 Bearing monitoring 18
6. Mounting forms 18
7. Degree of protection / Sealing system / Painting 18
7.1 Degree of protection 18
7.2 Sealing system 19
7.3 Painting 19
7.3.1 Tropicalized painting 19
8. Voltage / Frequency 19
9. Overload capacity 20
10. Ambient / Insulation 20
10.1 Space heaters 20
11. Motor protection 20
11.1 Protection based on operating temperature 21
11.2 Protection based on operating current 21
12. Variable speed drive application 21
12.1 Considerations regarding rated voltage 21
12.2 Torque restrictions on variable speed drive applications 22
12.3 Restrictions regarding current flow through the bearings 23
12.4 Forced ventilation kit 23
12.5 Encoders 23
13. Tolerances for electrical data 23
14. Standard features 24
15. Optional features 26
16. Electrical data 34
17. Mechanical data 64
18. Terminal box drawings 68
19. Drip cover data 69
20. Packaging 70
21. Spare parts 72

1. Versions available

For the European market, W22 motors are available in three versions in accordance with IEC 60034-30: 2008: Standard Efficiency (IE1), High Efficiency (IE2) and Premium Efficiency (IE3). In figure 1 the efficiency levels of W22 motors at 50 Hz can be compared with the minimum levels established by IEC 60034-30.

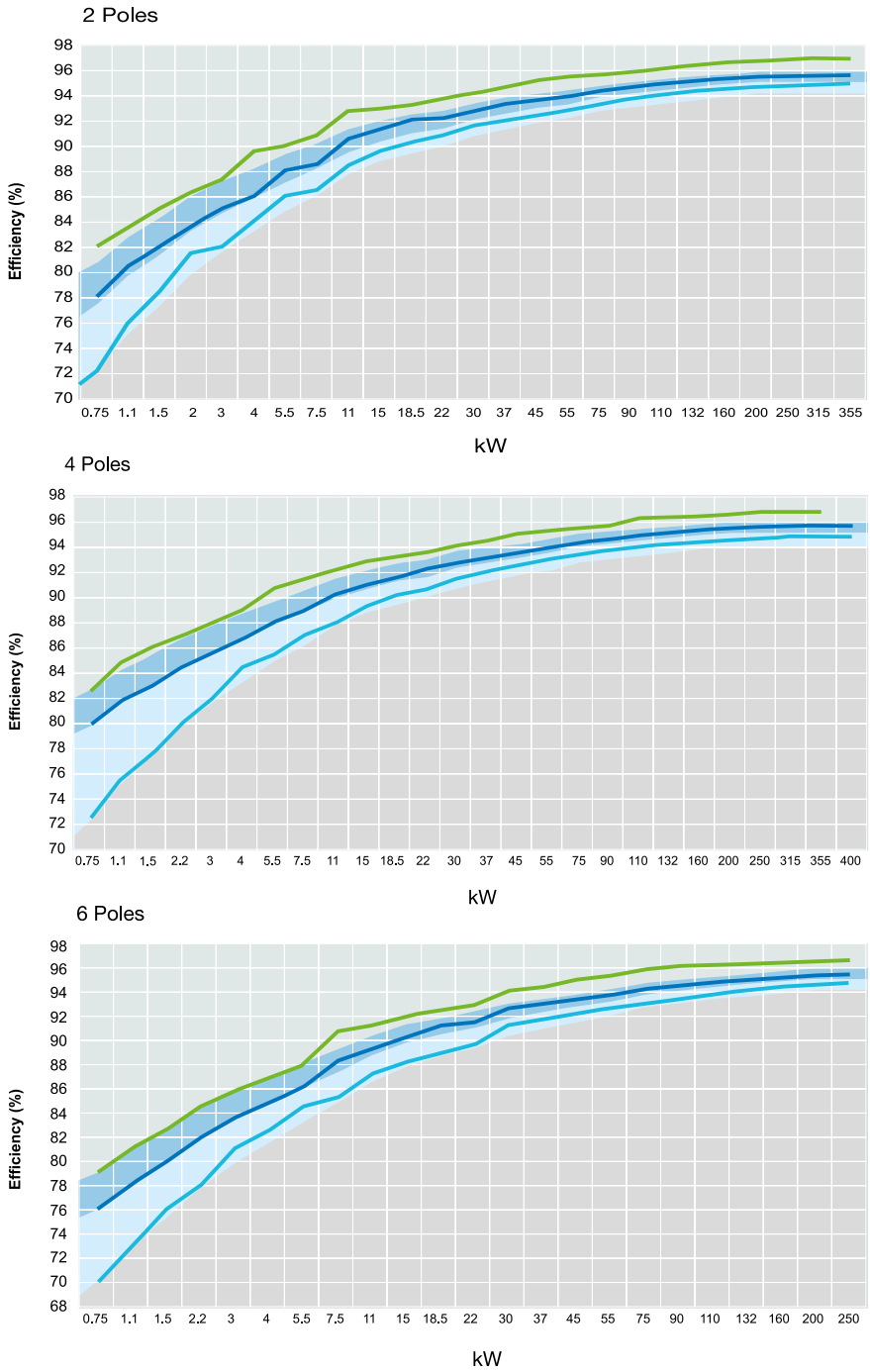

Figure 1 – Efficiency levels

W22 Standard Efficiency (IE1)
W22 High Efficiency (IE2)
W22 Premium Efficiency (IE3)
IE1
IE2
IE3

For all three efficiency levels the W22 motors exceed the minimum figures required by the Standard. They are fully tested and have their efficiency figures declared in accordance with IEC 60034-2-1: 2007 Standard with stray load losses directly determined by summation of losses.

Premium Efficiency motors have the output versus frame ratio as per EN 50347 Standard, allowing replacement of existing EFF2 and EFF1 motors with Premium Efficiency units.

Another characteristic of the electrical design of the W22 line is that it was conceived so that its efficiency remains practically constant in the 75% to 100% load range. Therefore, even when the motor does not run at full load its efficiency is not considerably affected (see figure 2), resulting in high levels of energy efficiency.

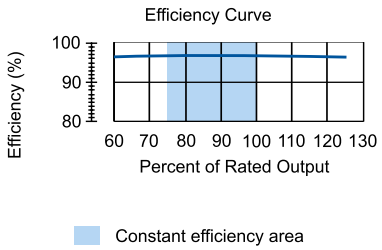

Figure 2 – Typical efficiency curve of W22 line

2. Standards

W22 motors meet the requirements and regulations of the latest version of the following Standards:

IEC 60034-1 Rotating electrical machines – Part 1: Rating and performance.
IEC 60034-2-1 Rotating electrical machines – Part 2-1: Standard methods for determining losses and efficiency from tests (excluding machines for traction vehicles).
IEC 60034-5 Rotating electrical machines – Part 5: Degrees of protection provided by the integral design of rotating electrical machines (IP code) - classification.
IEC 60034-6 Rotating electrical machines – Part 6: Methods of cooling (IC code).
IEC 60034-7 Rotating electrical machines – Part 7: Classification of types of enclosures and mounting arrangements (IM code).
IEC 60034-8 Rotating electrical machines – Part 8: Terminal markings and direction of rotation.
IEC 60034-9 Rotating electrical machines – Part 9: Noise limits.
IEC 60034-11-1 Rotating electrical machines – Part 11-1: Thermal protection.
IEC 60034-12 Rotating electrical machines – Part 12: Starting performance of single-speed three-phase cage induction motors.
IEC 60034-14 Rotating electrical machines – Part 14: Mechanical vibration of certain machines – Limits of vibration.
IEC 60034-30 Rotating electrical machines – Part 30: Efficiency classes for single-speed three-phase cage induction motors.
IEC 60072-1 Dimensions and output series for rotating electrical machines – Part 1: Frame numbers 56 to 400 and flange numbers 55 to 1080.

3. Construction details

The information included in this document refers to standard construction features and the most common variations for W22 motors in low voltage for general applications in frame sizes from IEC 63 to 355A/B.
W22 motors for special and/or customised applications are available on request. For more information, please contact your WEG office or distributor.

3.1 Frame

The W22 frame (figure 3) is manufactured in FC-200 cast iron to provide high levels of mechanical strength to cater for the most critical applications. The cooling fins are designed to minimize the accumulation of liquids and dust over the motor.

Figure 3 – W22 Frame

The motor feet are completely solid for better mechanical strength (figure 4), allowing easier alignment and installation.

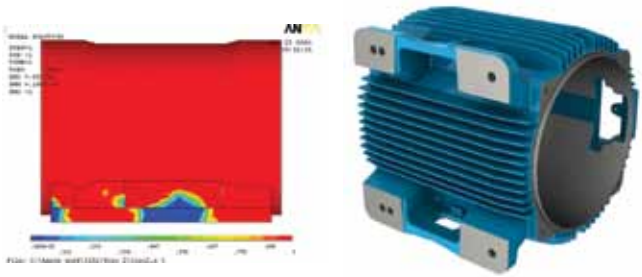

Figure 4 – Solid feet

3.2 Eyebolts

Eyebolts are available from frame size 100L. The position of the eyebolts are shown in the table 3:

Number of eyebolts	Description
1	Frames 100L to 200L Motors with feet and with side mounted terminal box
2	Frames 100L to 200L Motors with feet and with top mounted terminal box
2	Frames 100L to 200L – Motors without feet and with C or FF flange
2	Frames 225S/M to 355A/B – Motors with feet and side or top mounted terminal box. These motors have four threaded holes in the upper part of the frame for fastening of the eyebolts (figure 5)
2	Frames 225S/M to 355A/B – Motors without feet and with C or FF flange. These motors have four threaded holes in the upper part of the frame for fastening of the eyebolts and two more threaded holes in the bottom part

Table 3: Eyebolts

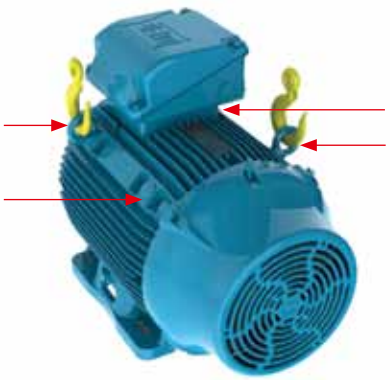

Figure 5: Motor with four threaded holes for fastening of the eyebolts

3.3 Points for vibration monitoring

To allow easy maintenance, specifically vibration testing, the 160 to 355 frames are designed with flat areas on both ends for better placement of the accelerometer (figure 6).
These areas are available both in vertical and horizontal planes. Besides areas on the frame, W22 motors count on flat areas on the endshields for easier installation of accelerometers.
As an option M8 threads for SPM accelerometers can be supplied.

Front side

Figure 6 - Flat surfaces for vibration monitoring on the back and front side

3.4 Earth terminals

All frames from 63 to 355A/B are provided with two earth terminals located inside and adjacent to the terminal box (see figure 7).

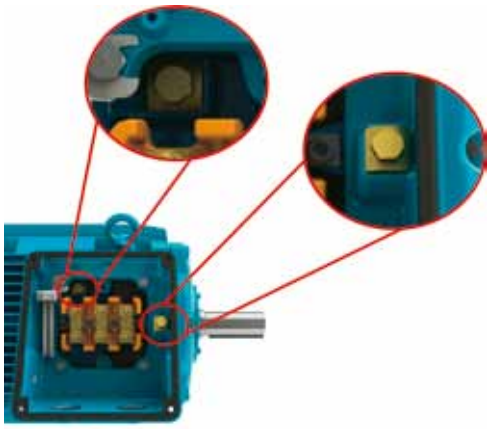

Figure 7 - Earth terminals in the terminal box

For frames 225S/M to 355A/B, two additional earth terminals on each side of the frame are provided to equalize electrical potential and provide greater safety for operators (figure 8).

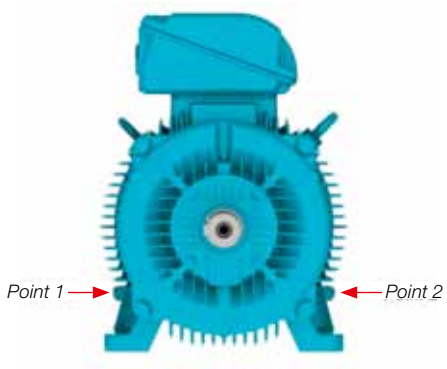

Figure 8 - Earth terminals position in the frame

3.5 Terminal box

The terminal box of W22 motors is made with FC-200 cast iron, which is the same material used to produce the frame and endshields. It is diagonally split for easier handling of leads and connections.
It is possible to supply 355A/B motors with an oversized terminal box. In this case, the aspect of the motor with side and top mounted terminal box is shown in the figures 9.1 and 9.2.

Figure 9.1 and 9.2 - Frame size 355A/B with oversized terminal box

For frame sizes 225S/M to 355A/B the terminal box is positioned towards the drive end of the motor and on top as standard.
This arrangement allows improvement of the airflow over the cooling fins, thus reducing motor operating temperatures.
Terminal box position on either the left or right hand side of the motor is possible through the use of an adaptor (see figure 10).

Figure 10 - Terminal box mounted on the left side viewing from shaft end

When supplied from the factory with a side mounted terminal box arrangement, this can be positioned on the opposite side simply by rotating the adaptor.
Similarly, by removing the adaptor and adjusting the length of the motor leads, the terminal box can be positioned on top of the motor.
The flexibility of terminal box positions on the W22 motor offered by the adaptor can be seen in figure 11.

Figure 11 – Terminal box mounted on both sides and on top (versatility)

Conversely, factory supplied motors with the terminal box position on top can be modified to side mounting by fitting the adaptor and extending the motor leads.

For the frame size range 63 to 200 the terminal box position is centralized on the motor frame and can be supplied in two configurations – top (standard) or left / right side (optional). A motor with a side mounted terminal box (B3R or B3L) can have the terminal box position located on the opposite side through modification.
Please Note: For all terminal box position modifications please contact WEG or your local WEG service centre.
For all frames, the terminal box can be rotated in 90° increments. Motors in IEC frame sizes 315L, 355M/L and 355A/B are supplied with removable cast iron cable gland plates. As an option, the gland plates can be supplied undrilled.
Motors are supplied with plastic threaded plugs in the cable entries to maintain the degree of protection during transport and storage.
In order to guarantee the degree of protection, cable entries must comply with at least the same degree of protection indicated on the motor nameplate. Lack of compliance with such detail can invalidate the motor warranty. If required, please contact the WEG Service Area for further advice.

3.6 Power supply connection leads

Motor power supply leads are marked in accordance with IEC 60034-8 and are connected to a terminal block made from a polyester based resin BMC (Bulk Moulding Compound), duly reinforced with fibre glass (see figure 12).

Figure 12: Six-pin terminal block

Motors 355A/B are provided with the terminal block as shown in the figure 13.

Figure 13: 355A/B terminal block

3.7 Accessory connection leads

Accessory terminals are assembled on connectors whenever the motor is supplied with a terminal block. They may be assembled inside the main power terminal box or in a separate accessory terminal box (figure 14).
Whether the accessory terminals are assembled inside the main power or a separate terminal box, an M20 x 1.5 threaded hole is provided for fitting of cable glands for the incoming connection leads.
In the Mechanical Data section of this catalogue it is possible to check the quantity of connectors that may be assembled inside the main power and accessory terminal boxes.

Figure 14: Accessory terminal box attached to power terminal box

For frames 132 to 355, there is also the option of providing a dedicated terminal box for the connection of space heaters as shown in figure 15.

Figure 15: Two accessory terminal boxes attached to power terminal box

3.8 Endshields

The drive end endshield (figure 16) is designed with fins for better thermal heat dissipation, and to ensure low bearing operating temperatures, resulting in extended lubrication intervals.

For the frames 225S/M to 355A/B, where ventilation is critical for thermal performance of the motor, the endshield fastening screws are placed in such a way so as not to block airflow to any fin, thus contributing to better thermal exchange.

Figure 16 – Drive and non-drive endshields

3.9 Drains

The endshields have holes for drainage of water that may condense inside of the frame. These holes are supplied with rubber drain plugs, in accordance with figure 17 for frame range 160 to 355. These plugs leave the factory in the closed position and must be opened periodically to allow the exit of condensed water. In the 63 to 132 frame range, plugs are automatic and made of plastic.

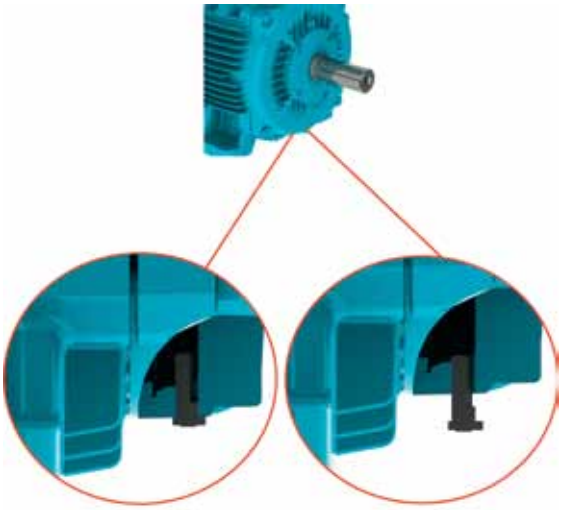

Figure 17: Detail of the drain plug position on drive endshield (160-355)

3.10 Fan cover

The fan cover is made of steel for frames 63 to 132 and FC-200 cast iron for frames 160 to 355. The cast iron fan covers have an aerodynamic design, which results in a significant reduction in noise level and optimized airflow between frame fins for heat exchange improvement. Figure 18 shows the aerodynamic design of the cast iron fan cover.

Figure 18 – Fan cover

3.11 Nameplate

The nameplate supplies information determining motor construction and performance characteristics. The line name is given on the first line of the nameplate together with nominal efficiency levels as required by IEC 60034-30.

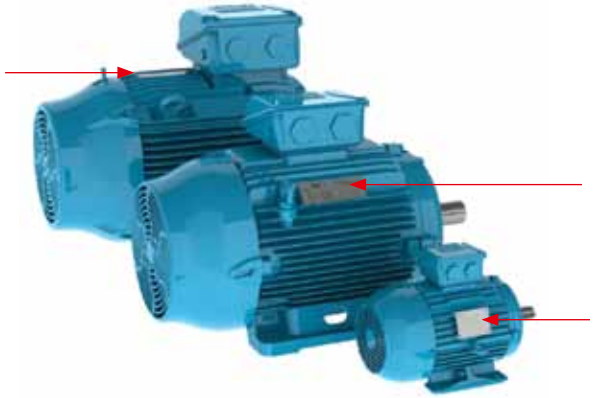

Figure 19 – Nameplate position of W22 motors

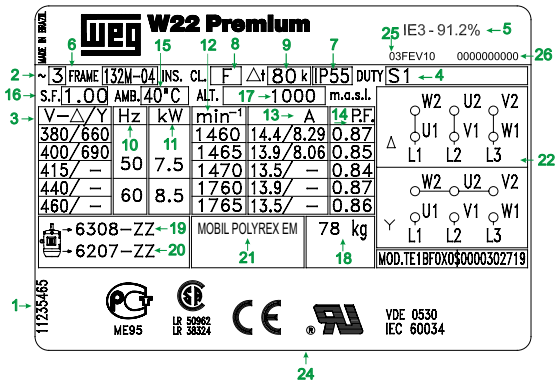

Figure 20 - Nameplate layout for frames 63 to 132

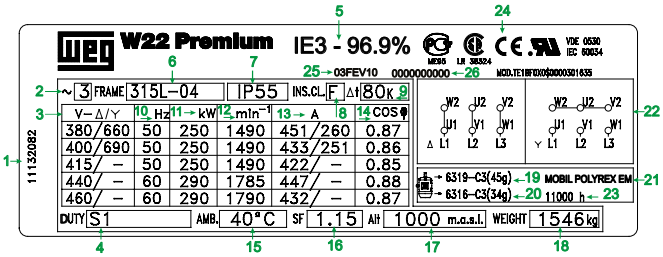

Figure 21 - Nameplate layout for frames 160 to 355

1 – Motor code
2 – Three phase
3 – Rated operating voltage
4 – Service duty
5 – Efficiency
6 – Frame size
7 – Degree of protection
8 – Insulation class
9 – Temperature rise
10 – Frequency
11 – Motor rated power
12 – Full load speed (rpm)
13 – Rated operating current
14 – Power factor
15 – Ambient temperature
16 – Service factor
17 – Altitude
18 – Motor weight
19 – Drive end bearing specification and amount of grease
20 – Non-drive end bearing specification and amount of grease
21 – Type of grease for bearings
22 – Connection diagram
23 – Relubrication intervals in hours
24 – Certification labels
25 - Fabrication data
26 - Serial number

4. Cooling system and Noise level / Vibration level / Impact resistance

4.1 Cooling system and Noise level

The W22 standard motors are totally enclosed fan cooled (IC411), as per IEC 60034-6 (figure 22). Non-ventilated versions (TENV), air over (TEAO) and with forced ventilation TEFV (IC416) are available on request. More information about IC416 option can be found in section 12 - Variable speed drive application.

Figure 22 – Cooling system

The cooling system (fan, non drive endshield and fan cover) is designed to minimize the noise level and improve thermal efficiency (figure 23).

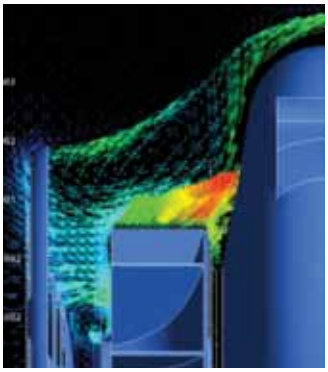

Figure 23 – Cooling system operation

W22 motors comply with IEC 60034-9 Standard and the corresponding sound pressure levels. Tables 4 and 5 show sound pressure levels in dB(A) which are obtained upon tests at 50 Hz and 60 Hz.

IEC 50 Hz				
Frame	Sound pressure level - dB(A)			
	2 Poles	4 Poles	6 Poles	8 Poles
63	52	44	43	-
71	56	43	43	41
80	59	44	43	42
90	64/ 62*	49	45	43
100	67	53	44	50
112	64	56	48	46
132	68/ 67*	60/ 56*	52	48
160	67	61	56	51
180	67	61	56	51
200	72/ 69*	65/ 63*	60	53
225	75/ 74*	66/ 63*	61	56
250	75/ 74*	66/ 64*	61	56
280	77	69	65	59
315S/M	77	71	67	61
315 L	78	74/ 73*	68	61
355M/L	80	76/ 74*	73	70
355A/B	83	76	73	70

** Applicable to IE3 Premium Efficiency Motors*

Table 4 – Sound pressure levels for 50 Hz motors

IEC 60 Hz				
Frame	Sound pressure level - dB(A)			
	2 Poles	4 Poles	6 Poles	8 Poles
63	56	48	47	-
71	60	47	47	45
80	62	48	47	46
90	68	51	49	47
100	71	54	48	54
112	69	58	52	50
132	72	61	55	52
160	72	64	59	54
180	72	64	59	54
200	76/ 74*	68/ 66*	62	56
225	80/ 79*	70/ 67*	64	60
250	80/ 79*	70/ 68*	64	60
280	81	73	69	63
315S/M	81	75	70	64
315L	82	79/ 77*	71	64
355M/L	84	81/ 78*	77	75
355A/B	89	81	77	75

** Applicable to IE3 Premium Efficiency Motors*

Table 5 – Sound pressure levels for 60 Hz motors

The noise level figures shown in tables 4 and 5 are taken at no load. Under load the IEC 60034-9 Standard foresees an increase of the sound pressure levels as shown in table 6.

Frame (mm)	2 poles	4 poles	6 poles	8 poles
90 ≤ H ≤ 160	2	5	7	8
180 ≤ H ≤ 200	2	4	6	7
225 ≤ H ≤ 280	2	3	6	7
H = 315	2	3	5	6
355 ≤ H	2	2	4	5

Table 6 – Maximum expected increase of sound pressure level for loaded motors.

Note: These figures refer to operating frequencies of 50 Hz and 60 Hz.
The global noise level can be reduced up to 2 dB (A) with the installation of a drip cover.

4.2 Vibration level

Vibration of an electrical machine is closely related to its assembly on the application and, thus, it is generally desirable to perform vibration measurements under installation and operational conditions. Nevertheless, to allow evaluation of the vibration generated by the electrical machine itself in a way to allow reproducibility of the tests and the obtaining of comparative measurements, it is necessary to perform such measurements with the machine uncoupled, under controlled test conditions. The test conditions and vibration limits described here are those found in IEC 60034-14.
The severity of vibration is the maximum value of vibration found among all the recommended measurement points and directions. The table below indicates the recommended admissible values of vibration severity under IEC standard 60034-14 for the frames IEC 56 to 400, for degrees of vibration A and B.
W22 motors are dynamically balanced with half key and the standard version meets the vibration levels of Grade A (without special vibration requirements) described in IEC 60034-14 Standard. As an option, motors can be supplied in conformance with vibration of Grade B. The RMS speed and vibration levels in mm/s of Grades A and B are shown in table 7.

Vibration	Frame	56 ≤ H ≤ 132	132 < H ≤ 280	H > 280
	Assembly	Vibration speed RMS (mm/s)	Vibration speed RMS (mm/s)	Vibration speed RMS (mm/s)
Grade A	Free suspension	1.6	2.2	2.8
Grade B	Free suspension	0.7	1.1	1.8

Table 7 –Speed and vibration levels

4.3 Impact resistance

The W22 motor complies with impact level IK08 – mechanical impact of 5J as per EN 62262 – Degrees of protection provided by enclosures for electrical equipment against external mechanical impacts (IK code) ensuring superior mechanical strength for the most demanding applications.

5. Shaft / Bearings

5.1 Shaft

The shaft of W22 standard motors is made of AISI 1040/45 steel, in frames IEC 63 to 315S/M, and in AISI 4140 steel for frames 315L, 355M/L and 355A/B. When supplied with roller bearings (optional for frames 160 and above), the shaft material must be AISI 4140.
As they are fitted with AISI 4140 steel shafts in frames 315L, 355M/L and 355A/B, W22 motors can employ roller bearings, making them suitable for heavy duty applications such as pulley and belt applications. Information about maximum allowable radial and axial loads on shaft ends is given in tables 9, 10 and 11.
Important: Under such circumstances, the non drive end bearing cap needs to be replaced as the non drive end bearing must be locked.
Shafts are supplied with an open profile key way, with a threaded centre hole and have dimensions shown in section 17 – Mechanical data.
W22 motors can be supplied with a second shaft end as per dimensions shown in section 17 – Mechanical data.
Information about maximum allowable radial and axial loads on the second shaft end is available on request.
As an option, W22 motors can be supplied with stainless steel shafts (AISI 316 and AISI 420) for highly corrosive environments.

Note: 2 pole motors will have as an option only the shaft end in stainless steel AISI 316.

5.2 Bearings

W22 motors are supplied with deep groove ball bearings as standard (figure 24). Optionally, frame size 160 and above can be supplied with NU series roller bearings, where high radial loads may occur.

Figure 24: Bearing view

The nominal bearing life L10h is 20,000 or 40,000 hours in conformance with maximum radial and axial loads as described in tables 9, 10 and 11. When direct coupled to the load (without axial or radial thrusts), the L10h bearing life is 50,000 hours.

In standard configuration, with ball bearings, the drive end bearing is locked axially from frame 160. To compensate for any axial movement the motors are fitted with pre-load washers for frames 63 to 200 and with pre-load springs for frames 225 to 355. When provided with roller bearings, the

rear bearing is locked and the axial movement is compensated by the axial play of the front roller bearing. Minimum and maximum admissible radial loads for roller bearings are shown in table 10 on page 16.

Bearings lifetime depends on the type and size of the bearing, the radial and axial mechanical loads it is submitted to, operating conditions (environment, temperature), rotational speed and grease life. Therefore, bearing lifetime is closely related to its correct use, maintenance and lubrication. Respecting the quantity of grease and lubrication intervals allows bearings to reach the lifetime given. W22 motors in IEC frames 225S/M and above are provided as standard with grease fittings in each endshield to permit the relubrication of the bearings. The quantity of grease and lubrication intervals are stamped in the motor nameplate. The lubrication interval is shown in tables 12 and 13 - page 17.
It must be emphasized that excessive lubrication, i.e. a quantity of grease greater than that recommended on the motor nameplate, can result in the increase of bearing temperatures leading to reduced operating hours.

Note:
1. L10 lifetime means that at least 90% of the bearings submitted to the maximum indicated loads will reach the number of hours indicated. The maximum admissible radial and axial loads for the standard configuration are shown in table 9, 10 and 11. The values of the maximum radial load consider axial load as nil. The values of the maximum axial load consider radial load as nil. For bearing lifetime in combined axial and radial loads condition contact WEG.
2. The radial force value Fr usually results from information recommended on catalogues of pulley/belts manufacturers. When this information is not available, the force Fr, under operation, can be calculated based on the output power, on coupling design characteristics with pulleys and belts and on the type of application. So we have:

$$Fr = \frac{19{,}1 \cdot 10^6 \cdot P_n}{n_n \cdot dp} \cdot ka \quad (N)$$

Where:
Fr is the radial force caused by pulley and belt coupling [N];
Pn is the motor rated power [kW];
n_n is the motor rated speed per minute [rpm];
dp is the pitch diameter of the driven pulley [mm];
ka is a factor that depends on belt tension and type of application (table 8).

	Groups and Basic Types of Application	ka Factor of the application	
		V Belts	Plane Belts
1	(Fans and Blowers. Centrifugal Pumps. Winding machines. Compressors. Machine tools) with outputs up to 30 HP (22 kW)	2.0	3.1
2	(Fans and Blowers, Centrifugal Pumps, Winding machines, Compressors, Machine tools) with outputs higher than 30 HP (22 kW), Mixers, Plungers, Printer Machines.	2.4	3.3
3	Presses, vibrating screens, Piston and screw compressor, pulverisers, helicoidal conveyors, woodworking machines, Textile machines, Kneading machines, Ceramic machines, Pulp and paper industrial grinders.	2.7	3.4
4	Overhead cranes, Hammer mills, Metal laminators, Conveyors, Gyratory Crushers, Jaw Crusher, Cone Crushers, Cage Mills, Ball Mills, Rubber Mixers, Mining machines, Shredders.	3.0	3.7

Table 8 – ka factor

Important:
1 - Special applications
Motor operation under adverse operating conditions, such as higher ambient temperatures and altitudes or abnormal axial / radial loads, may require specific lubrication measures and alternative relubrication intervals to those indicated in the tables provided within this technical catalogue.
2 - Roller bearings
Roller bearings require a minimum radial load so as to ensure correct operation. They are not recommended for direct coupling arrangements, or for use on 2 pole motors.
3 - Frequency inverter driven motors
Bearing life may be reduced when a motor is driven by a frequency drive at speeds above nominal. Speed itself is one of the factors taken into consideration when determining motor bearing life.
4 - Motors with modified mounting configurations
For motors supplied with horizontal mounting but working vertically, lubrication intervals must be reduced by half.
5 - Figures for radial thrusts
The figures given in the tables below for radial thrusts take into consideration the point upon which the load is applied, either at the centre of the shaft (L/2) or at the end of the shaft (L), figure 25.

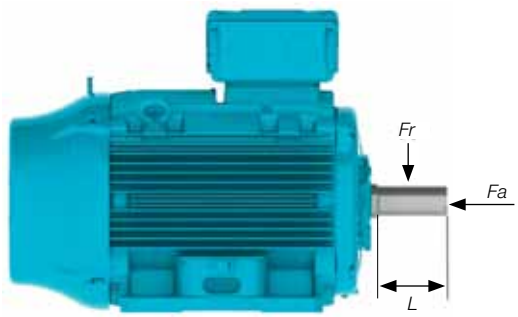

Figure 25 – Radial and axial thrust on motor shaft

5.2.1 Permissible loads

Radial thrust - Ball bearings

Maximum permissible radial thrust - 50 Hz – Fr in (kN) 20,000 hours								
Frame	2 poles		4 poles		6 poles		8 poles	
	L	L/2	L	L/2	L	L/2	L	L/2
63	0.4	0.3	0.4	0.3	0.4	0.3	0.4	0.3
71	0.5	0.5	0.6	0.5	0.6	0.5	0.7	0.6
80	0.6	0.6	0.7	0.7	0.8	0.7	1.0	0.8
90	0.7	0.6	0.8	0.7	0.9	0.8	1.0	0.9
100	0.9	1.0	1.0	1.1	1.2	1.3	1.3	1.4
112	1.2	1.3	1.4	1.5	1.6	1.8	1.7	1.9
132	1.8	2.0	2.2	2.4	2.4	2.7	2.6	2.9
160	2.3	2.6	2.6	2.9	2.7	3.3	2.7	3.7
180	3.1	3.5	3.6	4.0	4.2	4.7	4.2	5.2
200	3.7	4.0	4.2	4.7	4.9	5.4	5.7	6.2
225	5.1	5.5	5.2	6.3	5.3	7.0	5.7	8.1
250	4.9	5.3	5.2	5.7	6.5	7.1	6.0	8.2
280	5.0	5.4	6.7	7.2	7.8	8.4	8.7	9.4
315S/M	4.3	4.7	7.0	7.7	8.1	8.8	9.0	9.8
315L	4.6	5.0	4.0	7.3	6.2	8.2	9.1	9.8
355M/L	4.8	5.1	8.5	9.3	9.6	10.4	11.6	12.6
355A/B	4.5	4.7	5.1	7.4	7.4	8.0	6.9	10.6

Table 9.1 – Maximum permissible radial thrusts for ball bearings

Radial thrust - Ball bearings

Maximum permissible radial thrust - 50 Hz – Fr in (kN) 40,000 hours								
Frame	2 poles		4 poles		6 poles		8 poles	
	L	L/2	L	L/2	L	L/2	L	L/2
63	0.2	0.2	0.3	0.3	0.4	0.3	0.4	0.3
71	0.3	0.3	0.4	0.4	0.5	0.5	0.6	0.5
80	0.5	0.5	0.6	0.5	0.6	0.6	0.7	0.7
90	0.5	0.5	0.6	0.5	0.7	0.6	0.8	0.7
100	0.7	0.7	0.7	0.8	0.9	1.0	1.0	1.1
112	0.9	1.0	1.0	1.1	1.2	1.4	1.3	1.4
132	1.4	1.6	1.6	1.8	1.8	2.0	2.0	2.2
160	1.8	2.0	1.9	2.1	2.2	2.4	2.5	2.7
180	2.4	2.7	2.7	3.0	3.2	3.5	3.6	3.9
200	2.8	3.0	3.2	3.5	3.7	4.0	4.3	4.7
225	3.9	4.3	4.3	4.7	4.7	5.2	5.6	6.2
250	3.7	4.1	3.8	4.2	4.9	5.4	5.7	6.3
280	3.8	4.1	4.9	5.4	5.8	6.3	6.5	7.0
315S/M	3.1	3.4	4.9	5.4	5.7	6.2	6.3	6.9
315L	3.4	3.6	4.0	4.9	5.1	5.5	6.4	6.9
355M/L	3.3	3.6	5.8	6.3	6.5	7.1	8.2	8.9
355A/B	3.0	3.2	4.1	4.4	4.2	4.5	5.3	6.8

Table 9.2 – Maximum permissible radial thrusts for ball bearings

Radial thrust - Roller bearings

Maximum permissible radial thrust - 50 Hz - Fr in (kN) 20,000 or 40,000 hours						
Frame	4 poles		6 poles		8 poles	
	L/2	L	L/2	L	L/2	L
160	6	3.7	5.9	3.6	6	3.7
180	10.4	5.7	10.4	5.7	10.5	5.7
200	13.4	8.4	13.4	8.4	13.5	8.4
225S/M	15	6.9	15.1	7	15.3	7.3
250S/M	14.1	8.2	14.4	8.7	14.1	8.2
280S/M	20.9	12.1	21.2	13.1	21.3	13
315S/M	23.4	10.9	25.4	11.9	26.8	12.5
315L	8.5	4.0	13.3	6.2	22.6	10.4
355M/L	31.7	15	28.9	13.7	30.1	14.3
355A/B	10.7	5.1	16.4	7.8	14.6	6.9

Table 10 – Maximum permissible radial thrusts for roller bearings
Note: the figures given for roller bearings take into consideration shaft supplied with steel AISI 4140

Axial thrust - Ball bearings

Maximum permissible axial thrust - 50 Hz - Fa in (kN) - 20,000 hours							
Frame	Poles	Horizontal		Vertical with shaft upwards		Vertical with shaft downwards	
		Pushing	Pulling	Pushing	Pulling	Pushing	Pulling
63	2	0.2	0.2	0.2	0.2	0.2	0.2
	4	0.3	0.3	0.3	0.3	0.3	0.3
	6	0.3	0.4	0.3	0.4	0.4	0.3
	8	0.3	0.4	0.3	0.4	0.4	0.3
71	2	0.2	0.3	0.2	0.3	0.2	0.3
	4	0.3	0.4	0.3	0.4	0.3	0.4
	6	0.4	0.5	0.4	0.5	0.4	0.5
	8	0.5	0.6	0.4	0.6	0.5	0.6
80	2	0.3	0.4	0.3	0.4	0.3	0.4
	4	0.4	0.6	0.3	0.6	0.4	0.5
	6	0.5	0.7	0.4	0.7	0.5	0.7
	8	0.6	0.8	0.5	0.9	0.6	0.8
90	2	0.4	0.4	0.3	0.5	0.4	0.4
	4	0.5	0.6	0.5	0.7	0.5	0.6
	6	0.6	0.7	0.6	0.8	0.6	0.7
	8	0.8	0.9	0.7	0.9	0.8	0.8
100	2	0.4	0.6	0.3	0.7	0.4	0.6
	4	0.5	0.8	0.4	0.9	0.5	0.8
	6	0.7	1.0	0.6	1.1	0.7	1.0
	8	0.8	1.2	0.7	1.3	0.8	1.1
112	2	0.5	0.8	0.5	0.9	0.6	0.7
	4	0.7	1.1	0.7	1.2	0.8	1.0
	6	1.0	1.4	0.9	1.5	1.0	1.3
	8	1.1	1.5	1.0	1.7	1.1	1.4
132	2	0.7	1.3	0.6	1.5	0.8	1.2
	4	1.0	1.8	0.8	2.1	1.0	1.7
	6	1.2	2.2	1.1	2.5	1.3	2.1
	8	1.4	2.5	1.2	2.8	1.4	2.3
160	2	2.4	1.7	0.2	2.1	2.8	1.5
	4	3.0	2.3	2.7	2.7	3.4	2.0
	6	3.4	2.7	3.1	3.3	4.0	2.4
	8	3.9	3.2	3.6	3.7	4.4	2.9
180	2	3.2	2.3	2.9	2.8	3.7	2.0
	4	3.9	3.0	3.6	3.7	4.6	2.7
	6	4.7	3.8	4.2	4.5	5.3	3.3
	8	5.2	4.4	4.8	5.1	6.0	3.9
200	2	3.6	2.6	3.1	3.3	4.3	2.1
	4	4.5	3.5	4.0	4.3	5.3	3.0
	6	5.2	4.2	4.7	5.1	6.1	3.7
	8	6.0	5.0	5.5	5.9	6.9	4.5
225	2	4.6	3.8	3.8	4.9	5.7	3.1
	4	5.8	5.0	5.0	6.3	7.1	4.2
	6	6.7	5.9	5.7	7.6	8.4	4.9
	8	7.8	7.0	6.9	8.5	9.3	6.1
250	2	4.5	3.7	3.7	4.9	5.6	3.0
	4	5.4	4.7	4.2	6.6	7.4	3.4
	6	6.8	6.0	5.4	8.0	8.8	4.6
	8	7.8	7.1	6.6	8.9	9.7	5.9
280	2	4.4	3.7	3.2	5.4	6.2	2.4
	4	6.3	5.5	4.6	8.0	8.8	3.9
	6	7.6	6.8	5.8	9.4	10.2	5.0
	8	8.5	7.8	6.6	10.6	11.4	5.8
315S/M	2	4.1	3.3	2.4	5.9	6.7	1.6
	4	6.8	6.0	4.3	10.0	10.7	3.5
	6	8.0	7.2	5.2	11.9	12.7	4.5
	8	9.1	8.3	6.2	13.2	14.0	5.5
315L	2	3.0	2.2	1.1	5.0	5.7	0.4
	4	4.5	3.7	1.4	8.2	8.9	0.6
	6	5.2	4.4	1.9	9.5	10.3	1.2
	8	6.3	5.5	3.4	10.0	10.8	2.6
355M/L	2	4.4	3.7	1.1	8.8	9.5	0.3
	4	7.7	7.0	3.2	13.9	14.7	2.5
	6	9.1	8.4	4.7	15.3	16.0	3.9
	8	10.9	10.2	6.4	17.2	17.9	5.7
355A/B	2	4.1	3.3	On request			
	4	6.8	6.0				
	6	7.8	7.0				
	8	9.8	9.0				

Table 11.1 – Maximum pemissible axial thrusts for ball bearings

Axial thrust - Ball bearings

Maximum permissible axial thrust - 50 Hz - Fa in (kN) - 40,000 hours							
Frame	Poles	Horizontal		Vertical with shaft upwards		Vertical with shaft downwards	
		Pushing	Pulling	Pushing	Pulling	Pushing	Pulling
63	2	0.1	0.1	0.1	0.1	0.1	0.1
	4	0.2	0.2	0.2	0.2	0.2	0.2
	6	0.2	0.2	0.2	0.2	0.2	0.2
	8	0.2	0.2	0.2	0.2	0.2	0.2
71	2	0.1	0.2	0.1	0.2	0.1	0.2
	4	0.2	0.3	0.2	0.3	0.2	0.2
	6	0.2	0.3	0.2	0.3	0.2	0.3
	8	0.3	0.4	0.3	0.4	0.3	0.4
80	2	0.2	0.3	0.1	0.3	0.2	0.3
	4	0.2	0.4	0.2	0.4	0.2	0.3
	6	0.3	0.5	0.3	0.5	0.3	0.4
	8	0.4	0.6	0.3	0.6	0.4	0.5
90	2	0.2	0.3	0.2	0.3	0.2	0.2
	4	0.3	0.4	0.3	0.4	0.3	0.3
	6	0.4	0.5	0.4	0.5	0.4	0.4
	8	0.5	0.6	0.5	0.6	0.5	0.5
100	2	0.2	0.4	0.2	0.4	0.2	0.3
	4	0.3	0.5	0.2	0.6	0.3	0.5
	6	0.4	0.7	0.3	0.8	0.4	0.6
	8	0.5	0.8	0.4	0.9	0.5	0.7
112	2	0.3	0.5	0.3	0.6	0.3	0.4
	4	0.4	0.7	0.4	0.8	0.5	0.6
	6	0.6	0.9	0.5	1.1	0.6	0.8
	8	0.7	1.0	0.6	1.2	0.7	0.9
132	2	0.4	0.9	0.3	1.1	0.5	0.8
	4	0.6	1.2	0.5	1.4	0.6	1.1
	6	0.8	1.5	0.6	1.8	0.8	1.3
	8	0.9	1.7	0.7	2.0	0.9	1.5
160	2	1.8	1.1	1.6	1.5	2.2	0.9
	4	2.2	1.5	1.9	1.9	2.6	1.2
	6	2.5	1.8	2.2	2.3	3.1	1.5
	8	2.9	2.2	2.5	2.7	3.4	1.8
180	2	2.4	1.5	2.1	2.0	2.9	1.2
	4	2.9	2.0	2.5	2.6	3.5	1.6
	6	3.4	2.5	3.0	3.2	4.1	2.1
	8	3.9	3.0	3.5	3.7	4.6	2.6
200	2	2.7	1.7	2.2	2.4	3.4	1.2
	4	3.3	2.3	2.8	3.1	4.1	1.8
	6	3.8	2.8	3.3	3.8	4.8	2.3
	8	4.4	3.4	3.9	4.3	5.3	2.9
225	2	3.4	2.6	2.7	3.7	4.5	1.9
	4	4.2	3.5	3.4	4.7	5.5	2.6
	6	4.8	4.0	3.8	5.7	6.5	3.0
	8	5.7	4.9	4.8	6.4	7.1	4.1
250	2	3.4	2.5	2.5	3.7	4.5	1.8
	4	3.9	3.1	2.6	5.0	5.9	1.8
	6	4.9	4.1	3.6	6.2	7.0	2.8
	8	5.8	4.9	4.5	6.8	7.6	3.8
280	2	3.3	2.5	2.0	4.3	5.1	1.2
	4	4.6	3.8	2.9	6.2	7.0	2.1
	6	5.4	4.7	3.6	7.3	8.0	2.8
	8	6.1	5.4	4.2	8.2	9.0	3.4
315	2	2.9	2.2	1.2	4.8	5.5	0.4
	4	4.7	4.0	2.2	7.9	8.6	1.4
	6	5.6	4.8	2.8	9.4	10.2	2.0
	8	6.4	5.6	3.4	10.4	11.2	2.6
315L	2	3.0	2.2	1.1	5.0	5.7	0.4
	4	4.5	3.7	1.4	8.2	8.9	0.6
	6	5.2	4.4	1.9	9.5	10.3	1.2
	8	6.3	5.5	3.4	10.0	10.8	2.6
355M/L	2	3.1	2.4	0.6	6.7	7.5	0.2
	4	5.5	4.7	1.9	1.1	11.6	1.2
	6	6.3	5.6	2.8	11.8	12.7	2.0
	8	7.6	6.8	3.8	13.2	13.7	2.9
355A/B	2	2.9	2.2	On request			
	4	4.6	3.9				
	6	5.2	4.5				
	8	6.5	5.8				

Table 11.2 – Maximum permissible axial thrusts for ball bearings

Lubrication intervals

Lubrication intervals (hours)				
Frame	Poles	Bearing	50 Hz	60 Hz
160	2	6309	22,000	20,000
	4		25,000	25,000
	6			
	8			
180	2	6311	17,000	14,000
	4		25,000	25,000
	6			
	8			
200	2	6312	15,000	12,000
	4		25,000	25,000
	6			
	8			
225	2	6314	5,000	4,000
	4		14,000	12,000
	6		20,000	17,000
	8		24,000	20,000
250	2	6314	5,000	4,000
	4		14,000	12,000
	6		20,000	17,000
	8		24,000	20,000
280	2	6314	5,000	4,000
	4	6316	13,000	10,000
	6		18,000	16,000
	8		20,000	20,000
315	2	6314	5,000	4,000
	4	6319	11,000	8,000
	6		16,000	13,000
	8		20,000	17,000
355	2	6314	5,000	4,000
		6316	4,000	On request
	4	6322	9,000	6,000
	6		13,000	11,000
	8		19,000	14,000

Table 12 – Lubrication intervals for ball bearings

Note: the amount of grease is indicated on the nameplate

Lubrication intervals (hours)				
Frame	Poles	Bearing	50 Hz	60 Hz
160	4	NU309	25,000	25,000
	6			
	8			
180	4	NU311	25,000	25,000
	6			
	8			
200	4	NU312	25,000	21,000
	6			25,000
	8			
225	4	NU314	11,000	9,000
	6		16,000	13,000
	8		20,000	19,000
250	4	NU314	11,000	9,000
	6		16,000	13,000
	8		20,000	19,000
280	4	NU316	9,000	7,000
	6		14,000	12,000
	8		19,000	17,000
315	4	NU319	7,000	5,000
	6		12,000	9,000
	8		17,000	15,000
355	4	NU322	5,000	4,000
	6		9,000	7,000
	8		14,000	13,000

Table 13 – Lubrication intervals for roller bearings

Note: the amount of grease is indicated on the nameplate

5.2.2 Bearing monitoring

On request, W22 motors can be equipped with bearing temperature detectors which monitor bearing operating conditions. The most commonly used accessory is the PT-100 temperature detector for continuous monitoring of bearing operating temperature.
This type of monitoring is extremely important considering that it directly affects the grease and bearing lives particularly on motors equipped with regreasing facilities.

6. Mounting forms

Motors are supplied, as standard, in the B3T configuration, with the terminal box on top.

Figure 26 – B3T mounting

The mounting configuration for the W22 motor lines comply with IEC 60034-7 standard. Standard mounting forms and their variations are shown in table 14. After the designation, a characteristic letter is used to define the terminal box position. So, the mounting code IM B3 can be seen in WEG documents as detailed below (without IM code).
B3L – terminal box on left hand side of the motor frame
B3T – terminal box on top of the motor frame
B3R – terminal box on right hand side of the motor frame

Note: The terminal box position is defined viewing the motor from the shaft end (figure 26).

Basic mountings	Other type of mounting				
IM B3	IM V5	IM V6	IM B6	IM B7	IM B8
IM 1001	IM 1011	IM 1031	IM 1051	IM 1061	IM 1071
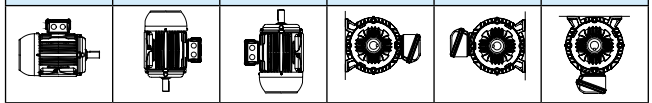					
IM B35	IM V15	IM V36	- *)	- *)	- *)
IM 2001	IM 2011	IM 2031	IM 2051	IM 2061	IM 2071
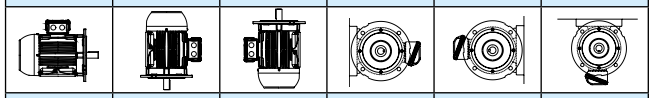					
IM B34	IM V17	IM V37	- *)	- *)	- *)
IM 2101	IM 2111	IM 2131	IM 2151	IM 2161	IM 2171
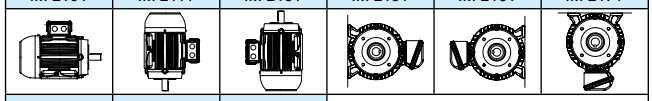					
IM B5	IM V1	IM V3			
IM 3001	IM 3011	IM 3031			
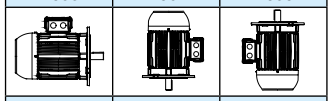					
IM B14	IM V18	IM V19			
IM 3601	IM 3611	IM 3631			
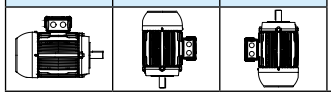					

Table 14 – Mountings configurations

** Non-defined mountings by IEC 60034-7*

Important:

1. The mountings IM B34 and IM B14 with C-DIN flange, in accordance with DIN standard EN 50347, are limited to frame size 132; C flange in accordance with NEMA MG 1 Part 4 standard is available for frames 63 to 355M/L.
2. For motors mounted vertically shaft down fitting of a drip cover is recommended to prevent ingress of small objects into the fan cover. The increase in total length of the motor with drip cover is shown in the section 19.
3. For vertically shaft up mounted motors installed in environments containing liquids, the use of a rubber slinger is recommended to prevent the ingress of liquid into the motor through the shaft.

7. Degree of protection / Sealing system / Painting

7.1 Degree of protection

As per IEC 60034-5, the degree of protection of a rotating electrical machine consists of the letters IP (ingress protection), followed by two characteristic numerals, with the following meaning:

a) First characteristic numeral: referred to protection of people against or approach to live parts and against contacts with moving parts (other than smooth rotating shafts and the like) inside the enclosure and protection of the machine against ingress of solid and foreign objects.
b) Second characteristic numeral: protection of machines against harmful effects due to ingress of water.

W22 motors are supplied with degrees of protection in conformance with IEC 60034-5. As standard, they are IP55, which means:

a) First characteristic numeral 5: machine protected against dust. The enclosure is protected against contact with moving parts. Ingress of dust is not totally prevented, but dust does not enter in sufficient quantity to interfere with satisfactory operation of the machine.
b) Second characteristic numeral 5: Machine protected against water jets. Water projected by a nozzle against the machine from any direction shall have no harmful effect.

7.2 Sealing system

The sealing system applied to the shaft of W22 motors in frame 63 to 200 is V'ring. For frames 225S/M to 355A/B the sealing system is the exclusive WSeal®, which consists of a double lipped V'Ring with a metallic cap (see figure 27). This configuration operates like a labyrinth preventing ingress of water and dust into the motor.

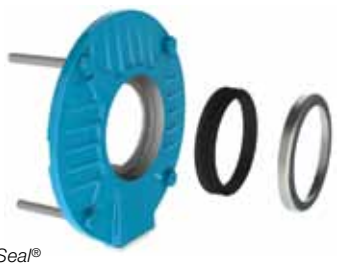

Figure 27 – WSeal®

Alternatively, W22 motors can be supplied with other sealing systems, for example, Oilseal, tachonite labyrinth and the WEG exclusive W3 Seal®, among others (see Section 15 – Optional features).
When fitted with flange, the recommended seal is lip leal (no contact with liquid) and Oilseal (with contact with liquid)

7.3 Painting

Figure 28 – WEG internal painting plan

W22 motors of frame 63 to 132 are supplied as standard with WEG internal painting plan 207A. This plan consists of:

- Primer: one coat with 20 to 55 µm of alkyd primer;
- Finishing: one coat with 30 to 40 µm of styrenated alkyd synthetic enamel.

And, W22 motors of frame 160 up to 355 are supplied as standard with WEG internal painting plan 203A, consisting of:

- Primer: one coat with 20 to 55 µm of alkyd primer;
- Finishing: one coat with 50 to 75 µm of alkyd synthetic enamel.

These painting plans have a minimum resistance to the salt spray test of 120 hours (plan 207A) and 240 hours (plan 203A) in accordance with ASTM B117-03 and may be used in motors applied in normal environments, slightly severe, sheltered or non-sheltered, for industrial use, with low relative humidity, normal temperature variations and the presence of SO_2.

Note:
These painting plans are not recommended for direct exposure to acid steam, alkalis, solvents and salty environments.
Alternative painting plans are available on request, which are suitable to guarantee additional protection in aggressive environments, either protected or unprotected (see section 15 – Optional features).

Tropicalized painting

The integrity of the insulation system is the primary consideration when determining the lifetime of an electric motor. High humidity can result in premature deterioration of the insulation system, therefore for any ambient temperature with relative humidity above 95%, it is recommended to coat all internal components of the motor with an epoxy painting, also known as tropicalization.

8. Voltage / Frequency

IEC 60034-1 the combination of voltage and frequency variations are classified as Zone A or Zone B, as per figure 29.

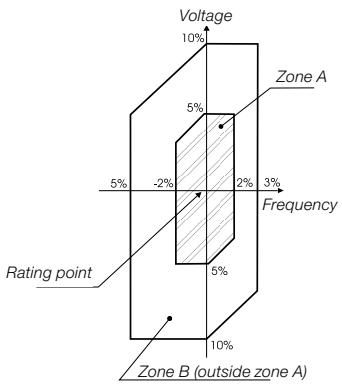

Figure 29 - Rated voltage and frequency limits for electric motors

IEC 60034-1 states that the motor must be suitable to perform its main function (supply torque) continuously at Zone A. However, this motor may not fully meet its performance characteristics due to power supply voltage and frequency variation, which can result in temperature rise above the rated value.
The motor must also be suitable to perform its main function (supply torque) at Zone B. However, the performance characteristic changes will be greater than those operating at Zone A. The temperature rise will also be higher than that of rated voltage and frequency and that operating at Zone A. Prolonged operation near Zone B boundary is not recommended.

9. Overload capacity

As per IEC 60034-1, motors with output power up to 315 kW are suitable for an overload 1.5 times the rated torque for 2 minutes.

10. Ambient / Insulation

Unless otherwise specified, the rated power outputs shown in the electrical data tables within this catalogue refer to continuous duty operation S1, as per IEC 60034-1 and under the following conditions:

- With ambient temperature range -30°C to +40°C
- With altitudes up to 1000 metres above sea level

For operating temperatures and altitudes differing from those above, the factors indicated in table 15 must be applied to the nominal motor power rating in order to determine the derated available output (Pmax).

Pmax = Pnom x correction factor

T (°C)	Altitude (m)								
	1000	1500	2000	2500	3000	3500	4000	4500	5000
10							0.97	0.92	0.88
15						0.98	0.94	0.90	0.86
20					1.00	0.95	0.91	0.87	0.83
25				1.00	0.95	0.93	0.89	0.85	0.81
30			1.00	0.96	0.92	0.90	0.86	0.82	0.78
35		1.00	0.95	0.93	0.90	0.88	0.84	0.80	0.75
40	1.00	0.97	0.94	0.90	0.86	0.82	0.80	0.76	0.71
45	0.95	0.92	0.90	0.88	0.85	0.81	0.78	0.74	0.69
50	0.92	0.90	0.87	0.85	0.82	0.80	0.77	0.72	0.67
55	0.88	0.85	0.83	0.81	0.78	0.76	0.73	0.70	0.65
60	0.83	0.82	0.80	0.77	0.75	0.73	0.70	0.67	0.62
65	0.79	0.76	0.74	0.72	0.70	0.68	0.66	0.62	0.58
70	0.74	0.71	0.69	0.67	0.66	0.64	0.62	0.58	0.53
75	0.70	0.68	0.66	0.64	0.62	0.60	0.58	0.53	0.49
80	0.65	0.64	0.62	0.60	0.58	0.56	0.55	0.48	0.44

Table 15 – Correction factors for altitude and ambient temperature

W22 motors are supplied with class F insulation and Class B (80 K) temperature rise at normal operating conditions (unless otherwise specified).
The difference between the temperature of the class F insulation (105 K) and the temperature rise of the design (80 K) means that, in practice, W22 motors are suitable to supply output ratings above the rated values up to a limit where the temperature rise reaches the temperature rise value of the insulation class.
The ratio between temperature rise and service factor is given by the equation below:

$$\Delta T_{FINAL} \cong (S.F.)^2 \times \Delta T_{INITIAL}$$

Upon service factor calculation, we can see that SF is approximately 1.15. This reserve of temperature also allows W22 motors with class B temperature rise (80 K) to operate continuously at:

- Up to 15% above its rated output power, considering 40°C ambient temperature and 1.000 m.a.s.l. or;
- Up to 55°C ambient temperature, keeping the rated output power or;
- Up to 3000 m.a.s.l., keeping the rated output power

Note: Please note that under these conditions combined ambient and temperature rise may reach class F limits.

Bearing lubrication intervals will change under operating conditions other than 40°C maximum ambient temperature and 1000 metres above sea level. Contact WEG for more information.
All W22 motors are wound with the WISE® insulation system which consists of enamelled copper wire meeting temperatures up to 200°C and impregnated with solvent free resin. The WISE® system also permits motor operation with variable speed drives (see section 12).

10.1 Space heaters

The use of space heaters are recommended in two situations:

- Motors installed in environments with relative air humidity up to 95%, in which the motor may remain idle for periods greater than 24 hours;
- Motors installed in environments with relative air humidity greater than 95%, regardless of the operating schedule. It should be highligthed that in this situation it is strongly recommended that an epoxy paint known as tropicalized painting is applied in the internal components of the motor. More information can be obtained in section 7.3.

The supply voltage for space heaters must be defined by the Customer. For all frame sizes, W22 motors can be provided with space heaters suitable for 110-127 V, 220-240 V and 380-480 V. As an option, dual voltage heaters of 110-127 / 220-240 V can be supplied for motor frame sizes 112 to 355A/B.
The power rating and number of space heaters fitted depends on the size of the motor as indicated in table 16 below:

Frame	Quantities	Total Power rated (W)
63 to 80	1	7.5
90 and 100	1	11
112	2	22
132 and 160	2	30
180 and 200	2	38
225 and 250	2	56
280 and 315	2	140
355	2	174

Table 16 – Power and quantity of space heaters

11. Motor protection

Protections available for W22 can be classified as follows:

- Based on operating temperature
- Based on operating current.

In section 14 - Standard features it is possible to identify the type of protection for each W22 line.

11.1 Protection based on operating temperature

Continuous duty motors must be protected from overload either by a device integrated into the motor or via an independent protection system, usually a thermal relay with rated or setting current, equal to or below the value obtained when multiplying the power supply rated current (In), as per table 17.

Service Factor	Relay setting current
1.0 up to 1.15	In x S.F.
≥ 1.15	(In x S.F.) – 5%

Table 17 – Relay setting current referred to service factor

PT-100

Figure 30 - PT-100

These are temperature detectors with operating principle based on the properties that some materials vary the electric resistance with the variation in temperature (usually platinum, nickel or copper). They are also fitted with calibrated resistances that vary linearly with temperature, allowing continuous reading of motor operating temperature through a monitoring display, with high precision rate and response sensitivity.
The same detector can serve as alarm (with operation above the regular operating temperature) and trip (usually set up for the maximum temperature of the insulation class).

Thermistor (PTC)

Figure 31 – Thermistor (PTC)

These are thermal protectors consisting of semiconductor detectors with sudden variation of the resistance when reaching a certain temperature.
PTC is considered a thermistor with the resistance increasing drastically to a well defined temperature figure. This sudden resistance variation blocks the PTC current, causing the output relay to operate, and the main circuit to switch-off.
The thermistors are of small dimensions, do not wear and have quicker response if compared to other protectors, although they do not allow continuous monitoring of motor operating temperature.
Together with their electronic circuits, these thermistors provide full protection against overheating caused by overload, under or overvoltage or frequent reversing operations.
Where thermistor protection is required to provide both alarm and trip operation, it is necessary for each phase of the motor winding to be equipped with two sets of appropriately rated thermistors.
WEG Automation has a product called RPW which is an electronic relay intended specifically to read the PTC signal and operate its output relay. For more information go to the website www.weg.net.

Bimetallic thermal protectors

These are silver-contact thermal sensors, normally closed, that operate at certain temperature rise. When their operating temperature decreases, they go back to the original position instantaneously, allowing the silver contact to close again.
The bimetallic thermal protectors are series-connected with the contactor coil, and can be used either as alarm or trip.

There are also other types of thermal protectors such as PT-1000, KTY and thermocouples. Contact your local WEG office closest to you for more information.

11.2 Protection based on operating current

Overloads are processes that usually make the temperature increase gradually. To solve this problem, the thermal protectors described in item 11.1 are quite suitable. However, the only way to protect motors against short-circuit currents is the application of fuses. This type of protection depends directly on the current and it is highly effective in cases of locked rotor.
WEG Automation supplies fuses in versions D and NH. Go to the site www.weg.net for more information.

12. Variable speed drive application

12.1 Consideration regarding rated voltage

The stator windings of W22 motors are wound with class F insulation (class H optional) and are suitable for either DOL starting or via a variable speed drive. They incorporate the WEG exclusive insulation system - WISE® (WEG Insulation System Evolution) – which ensures superior electrical insulation characteristics.
The stator winding is suitable for variable speed drive application, taking into account the limits shown in table 18.

Rated voltage				
220-240/380-415 V-50 Hz // 440-460 V-60 Hz				
Motor rated voltage	Peak voltage on motor terminals (phase to phase)	dV/dt on motor terminals (phase to phase)	Rise time	Time between pulses
Vn ≤ 460 V	≤ 1600 V	≤ 5200 V/µs	≥ 0.1 µs	≥ 6 µs
460 V < Vn ≤ 575 V	≤ 1800 V	≤ 6500 V/µs		
575 V < Vn ≤ 690 V	≤ 2200 V	≤ 7800 V/µs		

Table 18 – Limit conditions for variable frequency drive operation without application of a load reactor

Notes:

1 – For the three cases above the maximum recommended switching frequency is limited at 5 kHz.
2 – If one or more of the above conditions is not followed accordingly (including the switching frequency), an output filter (load reactor) must be installed on the output of the VSD.

3 – General purpose motors with rated voltage up to 460V may be operated by a frequency inverter respecting the limits shown in table 18.
4 – General purpose motors which at the time of purchase did not have any indication of operation with a frequency inverter, and with nominal voltage greater than 460 V, require special insulation to support the limits indicated in table 18. Otherwise, the limits of the first line of the table (for nominal voltage up to 460 V) must be considered or a load reactor at the output of the VSD must be installed.
5 – General purpose motors which at the time of purchase did not have any indication of operation with a frequency inverter and which are the dual voltage type, for example 380/660 V and 400/690 V, may only operate driven by a frequency inverter in the higher voltage with the installation of load reactor or otherwise respecting the limits of the first line of the table (for nominal voltage up to 460 V).

12.2 Torque restrictions on variable speed drive applications

Self-ventilated variable speed drive motors have their torque limited at low frequencies due to the reduction in ventilation. Curves and derating tables must be applied to define the torque available (figure 32 / table 19).

Constant flux condition

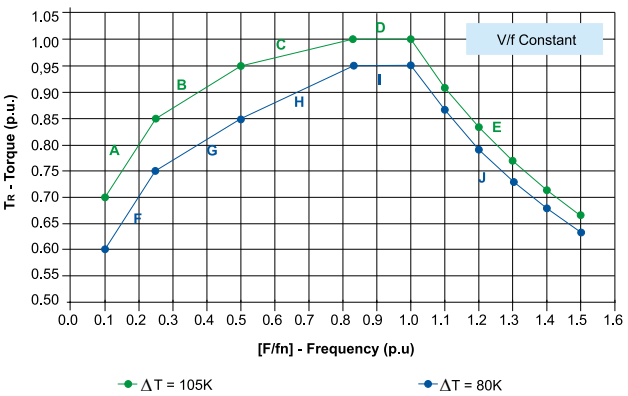

Figure 32 – Derating curve for constant flux

Derating factor with temperature rise for the insulation class*		
Interval	**Limited by**	**Apply this equation**
A	0.10 ≤ f/fn < 0.25	TR = (f/fn) + 0.60
B	0.25 ≤ f/fn < 0.50	TR = 0.40(f/fn) + 0.75
C	0.50 ≤ f/fn < 0.83	TR = 0.15(f/fn) + 0.87
D	0.83 ≤ f/fn ≤ 1.0	TR = 1.0
E	f/fn > 1.0	TR = 1/(f/fn)

Derating factor to maintain temperature rise at sinusoidal source**		
Interval	**Limited by**	**Apply this equation**
F	0.10 ≤ f/fn < 0.25	TR = (f/fn) + 0.50
G	0.25 ≤ f/fn < 0.50	TR = 0.40(f/fn) + 0.65
H	0.50 ≤ f/fn < 0.83	TR = 0.30(f/fn) + 0.70
I	0.83 ≤ f/fn ≤ 1.0	TR = 0.95
J	f/fn > 1.0	TR = 0.95/(f/fn)

Table 19 – Equation for torque definition at constant torque condition

(*) When the top curve is used (green), motor temperature rise will be limited by the temperature class of the insulation material. For example, for class F insulation motors, the temperature rise will be limited at 105 K. This curve can only be used for class F insulation and class B temperature rise motors in order to ensure that, when driven by a frequency drive, the temperature rise remains class F (above 80 and below 105 K).

(**) When the lower curve is used (blue), the motor temperature rise of the variable frequency drive will be the same driven by sinusoidal source. In other words, class F insulation motors with class B temperature rise will remain with class B temperature rise(≤ 80 K) even when driven by a variable frequency drive.

Note: The derating curves given in figure 32 are related to the temperature on motor winding and thermal class. These curves do not foresee thermal tolerance factor of the motors. They are intended to show the torque limitations for variable frequency drive motors.

Exclusive

Optimal flux condition®

The optimal flux solution was developed for low frequency applications with constant torque loads and it should not be used for variable torque loads or where the operating speed is higher than the rated frequency.
Optimal flux may only be applied under the following conditions:

- Motors must have a minimum efficiency of IE2
- Motor must be utilised with a WEG variable speed drive CFW-09 (version 2.40 or above) or CFW-11
- Application must be made with sensorless vector control (without encoder)

At optimal flux condition® the motor total losses are minimized, resulting in higher efficiency and consequently lower temperature rise. Therefore, the derating factor is smaller, as shown in figure 33 / table 20.

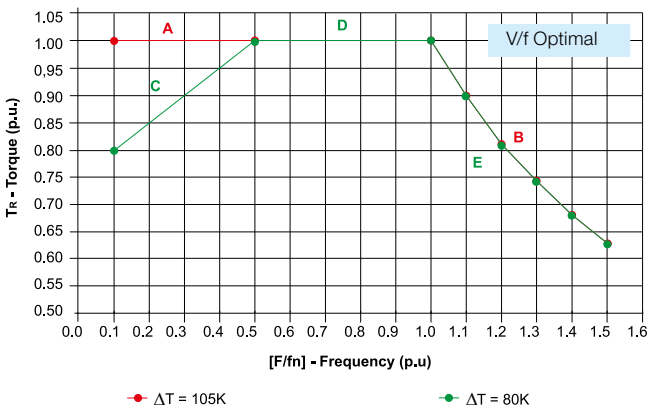

Figure 33 – Derating curve for optimal flux®

Derating factor with temperature rise for the insulation class with optimal flux®		
Interval	Limited by	Apply this equation
A	0.10 ≤ f/fn ≤ 1.0	Constant torque
B	f/fn >1.0	TR = 1/(f/fn) = fn/f

Derating factor to maintain temperature rise at sinusoidal source with optimal flux®		
Interval	Limited by	Apply this equation
C	0.10 ≤ f/fn < 0.50	TR = 0.5(f/fn) + 0.75
D	0.50 ≤ f/fn ≤ 1.0	Constant Torque
E	f/fn > 1.0	TR = 1/(f/fn) = fn/f

Table 20 – Equation for torque determination available at optimal flux condition

12.3 Restrictions regarding current flow through the bearings

Motors up to frame IEC 280S/M do not require additional features for variable frequency drive application. From frame 315S/M additional measures must be taken to avoid current flowing through the bearings. The solution for this problem is to use insulated bearings or insulated hub endshields (usually non drive endshield) and grounding brush, usually mounted on drive endshield.
WEG can supply a kit to modify motors that are not originally supplied with such protection.

12.4 Forced ventilation kit

For those cases where an independent cooling system is required, the W22 motors can be supplied with a forced ventilation kit, as shown in figure 34.

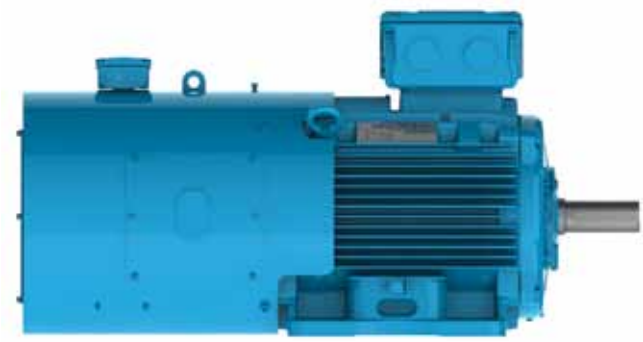

Figure 34 – Forced ventilation kit for W22 motors

When the forced ventilation kit is assembled on the motor in the factory, the overall motor length will be as shown in table 21.
As a local stock modification option, an alternative forced ventilation kit can be fitted. Please contact your local WEG office for details of these dimentions.

Frame size	Poles	Total motor length (L)	
		Without forced ventilation	With forced ventilation
90S	All	304	548
90L	All	329	573
100L	All	376	646
112M	All	393	660
132S	All	452	715
132M	All	490	753
132M/L	All	515	778
160M	All	598	855
160L	All	642	899
180M	All	664	908
180L	All	702	946
200M	All	729	976
200L	All	767	1014
225S/M	2	856	1140
	4/8	886	1170
250S/M	2	965	1217
	4/8	965	1217
280S/M	2	1071	1348
	4/8	1071	1348
315S/M	2	1244	1459
	4/8	1274	1489
315L	2	1353	1568
	4/8	1383	1598
355M/L	2	1412	1786
	4/8	1482	1856
355A/B	2	1607	1981
	4/8	1677	2051

Table 21 – Forced ventilation dimensions

12.5 Encoders

W22 motors may be supplied with encoders for speed control in closed loop. Encoders can be fitted to motors with either forced ventilation or with shaft mounted cooling fan (TEFC). When encoders are fitted to TEFC machines, motors may not have a second shaft end or be fitted with drip cover.
The following models of encoder are available for supply:

- Dynapar - HS35 - 1024ppr (hollow shaft)
- Kübler - Model 5020 - 1024ppr (hollow shaft)
- Hengstler - RI58 - 1024ppr (hollow shaft)
- Line & Linde - XH861 - 1024ppr (hollow shaft)
- Hubner Berlin - HOG 10 - 1024ppr (hollow shaft)
- Hubner Guinsen - FGH4 - 1024ppr (shaft)

Other models can be supplied on request.
Note: The encoders described above are of the 1024 pulses per revolution type. As on option, models of 2048 pulses per revolution are available.

13. Tolerances for electrical data

The following tolerances are allowed in accordance with IEC 60034-1:

Efficiency (η)	-0.15 (1-η) for Pnom ≤ 150 kW / -0.1 (1-η) for Pnom > 150 kW Where η is a decimal number
Power factor	$\frac{1 - \cos Ø}{6}$ Minimum 0.02 and Maximum 0.07
Slip	± 20% for Pnom ≥ 1 kW and ± 30 % for Pnom < 1 kW
Starting current	20% (without lower limit)
Starting torque	- 15% + 25%
Breakdown torque	- 10 %
Moment of inertia	± 10 %

Table 22 - Tolerances for electrical data

14. Construction features

Frame			63	71	80	90	100	112	132	160	180
Mechanical features											
Mounting form			B3T (options are available as per section 6)								
Frame	Material		Cast iron FC-200								
Degree of protection			IP55								
Grounding			Simple grounding (one inside the terminal box and one on the frame)								
Cooling method			Totally enclosed fan cooled - IC411								
Fan	Material	2-4p	Polypropylene								
		6-8p									
Fan cover	Material		Steel							Cast iron FC-200	
Endshields	Material		Cast iron FC-200								
Drain hole			Automatic plastic							Fitted with rubber drain plug	
Bearings	Clearance D.E		ZZ							C3	
	Clearance N.D.E		ZZ							Z-C3	
	Locking		Without bearing cap and with preload washer at non-drive end							DE locating bearing with bearing cap and with preload washer at non-drive end	
	Drive end side	2p	6201	6202	6204	6205	6206	6207	6308	6309	6311
		4 - 8p									
	Non drive end side	2p			6203	6204	6205	6206	6207	6209	6211
		4 - 8p									
Bearing seal			V'ring								
Lubrication	Type of grease		Mobil Polyrex EM								
	Grease fitting		Without grease fitting								
Terminal block			With terminal block								
Terminal box	Material		Cast iron FC-200								
Leads inlet	Main	Size	2 x M20 x 1.5			2 x M25 x 1.5		2 x M32 x 1.5		2 x M40 x 1.5	
	Plug		Threaded plug for transport and storage; cable gland as optional								
	Accessory	Size	1 x M20 x 1.5 lateral thread when fitted with accessories								
Shaft	Material		AISI 1040/45								
	Threaded hole	2p	M4	M5	M6	M8	M10	M10	M12	M16	
		4 - 8p									
Vibration			Grade A								
Balance			With half key								
Nameplate	Material		Stainless steel AISI 304								
Painting	Type		207A							203A	
	Colour		Standard Efficiency motors (IE1): RAL 5007 High Efficiency motors (IE2): RAL 5009 Premium Efficiency motors (IE3): RAL 6002								
Electrical features											
Design			N								
Voltage			220-240/380-415//440-460 V					380-415/660//440-460 V			
Winding	Material		Copper								
	Impregnation		Dip and bake								
	Insulation class		F (DT 80K)								
Service factor			1.00								
Rotor			Aluminium die cast								
Thermal protector			Without thermal protector							Thermistor PTC, 1 per phase, for tripping at 155°C	

Frame			200	225S/M	250S/M	280S/M	315S/M	315L	355M/L	355A/B
Mechanical features										
Mounting			B3T							
Frame	Material		Cast iron FC-200							
Degree of protection			IP55							
Grounding			Simple grounding (one inside the terminal box and one on the frame)	Double + additional (one inside the terminal box and three on the frame)						
Cooling method			Totally enclosed fan cooled - IC411							
Fan	Material	2p	Polypropylene							Aluminium
		4-8p	Polypropylene					Aluminium		
Fan cover	Material		Cast iron FC-200							
Endshields	Material		Cast iron FC-200							
Drain hole			Fitted with rubber drain plug							
Bearings	Clearance D.E		C3							
	Clearance N.D.E		Z-C3	C3						
	Locking		DE locating bearing with bearing cap and with preload washer at non-drive end	Locked on drive end with internal and external bearing cap and with preload springs on non drive end side						
	Drive end side	2p	6312	6314	6314	6314	6314	6314	6316	6316
		4 - 8p				6316	6319	6319	6322	6322
	Non drive end side	2p	6212			6314	6314	6314	6314	6314
		4 - 8p				6316	6316	6316	6319	6319
Bearing seal			V'ring	WSeal®						
Lubrication	Type of grease		Mobil Polyrex EM							
	Grease fitting		Without grease fitting	With grease fitting						
Terminal block			With terminal block							HGF terminal block
Terminal box	Material		Cast iron FC-200							
Leads inlet	Principal	Size	2 x M50 x 1.5		2 x M63 x 1.5			2 x M63 x 1.5 (removable gland plate)		
	Plug		Threaded plug for transportation and storage; cable gland as optional							
	Accessory	Size	1 x M20 x 1.5 lateral thread when fitted with accessories							
Shaft	Material		AISI 1040/45					AISI 4140		
	Threaded hole	2p	M20		M20	M20	M20	M20	M20	M20
		4 - 8p							M24	M24
Vibration			Grade A							
Balance			With half key							
Nameplate	Material		Stainless steel AISI 304							
Painting	Type		203A							
	Colour		Standard Efficiency motors (IE1): RAL 5007 High Efficiency motors (IE2): RAL 5009 Premium Efficiency motors (IE3): RAL 6002							
Electrical features										
Design			N							
Voltage			380-415/660//440-460 V							
Winding	Material		Copper							
	Impregnation		Dip and bake	Continuous flow impregnation						
	Insulation class		F (DT 80K)							
Service factor			1.00							
Rotor			Aluminium die cast							
Thermal protector			Thermistor PTC, 1 per phase, for tripping at 155°C							

15. Optional features

Frame	63	71	80	90	100	112	132
Mechanical optionals							
Terminal box							
Additional terminal box	O	O	O	O	O	O	O
Terminal box with removable base	NA	NA	NA	NA	NA	NA	NA
Gland plate	O	O	O	O	O	O	O
Epoxy compound on leads entry	O	O	O	O	O	O	O
Self-extinguishing foam at lead entry	S	S	S	S	S	S	S
Terminal block							
BMC terminal block - six-pin	S	S	S	S	S	S	S
BMC terminal block - twelve-pin	NA	NA	NA	O	O	O	O
HGF connection terminals	NA	NA	NA	NA	NA	NA	NA
Cable glands							
Plastic cable gland	O	O	O	O	O	O	O
Brass cable gland	O	O	O	O	O	O	O
Stainless steel cable gland	NA	NA	NA	O	O	O	O
Flange							
Flange FF	O	O	O	O	O	O	O
Flange FF (Superior)	O	O	O	O	O	O	O
Flange FF (Inferior)	NA	O	O	O	O	O	O
Flange C-DIN	O	O	O	O	O	O	O
Flange C-DIN (Superior)	O	O	O	O	O	O	O
Flange C-DIN (Inferior)	NA	O	O	O	O	O	O
Flange C	O	O	O	O	O	O	O
Flange C (Superior)	O	O	O	O	O	O	O
Flange C (Inferior)	NA	NA	NA	O	O	O	O
Fan							
Polypropylene (2 and 4 poles)	S	S	S	S	S	S	S
Polypropylene (6 and 8 poles)	S	S	S	S	S	S	S
Conductive plastic	O	O	O	O	O	O	O
Aluminium (2 and 4 poles)	O	O	O	O	O	O	O
Aluminium (6 and 8 poles)	O	O	O	O	O	O	O
Cast iron	O	O	O	O	O	O	O
Bearing							
Ball bearing (D.E)	S	S	S	S	S	S	S
Roller bearing (D.E)	NA	NA	NA	NA	NA	NA	NA
Ball bearing (N.D.E)	S	S	S	S	S	S	S
Insulated drive end bearing	NA	NA	NA	NA	NA	NA	NA
Insulated non drive end bearing	NA	NA	NA	NA	NA	NA	NA
Bearing cap							
Without bearing cap	S	S	S	S	S	S	S
With bearing cap	NA	O	O	O	O	O	O
Bearing sealing							
Nitrillic rubber lip seal	O	O	O	O	O	O	O
Nitrillic rubber oil seal	O	O	O	O	O	O	O
Nitrillic rubber oil seal double lip	O	O	O	O	O	O	O
Viton seal	O	O	O	O	O	O	O
Viton oil seal	O	O	O	O	O	O	O
Viton oil seal with stainless steel spring	O	O	O	O	O	O	O
Taconite Labyrinth	NA	NA	NA	O	O	O	O
W3 Seal®	NA	NA	NA	O	O	O	O

Notes: 1) Other optional features, on request.
2) Some combinations of optional features are not allowed – then contact WEG.

S (Standard)
NA (Not available)
O (Optional)

160	180	200	225S/M	250S/M	280S/M	315S/M	315L	355M/L	355A/B
Mechanical optionals									
Terminal box									
0	0	0	0	0	0	0	0	0	0
NA	NA	NA	0	0	0	0	S	S	S
0	0	0	0	0	0	0	0	0	0
0	0	0	NA	NA	NA	NA	NA	NA	NA
S	S	S	S	S	S	S	S	S	S
Terminal block									
S	S	S	S	S	S	S	S	S	NA
0	0	0	0	0	0	0	0	0	NA
NA	NA	NA	NA	NA	NA	NA	NA	NA	S
Cable glands									
0	0	0	0	0	0	0	0	0	0
0	0	0	0	0	0	0	0	0	0
0	0	0	0	0	0	0	0	0	0
Flange									
0	0	0	0	0	0	0	0	0	0
0	0	0	0	0	0	0	0	NA	NA
0	0	0	0	0	0	0	0	0	NA
NA	NA	NA	NA	NA	NA	NA	NA	NA	NA
NA	NA	NA	NA	NA	NA	NA	NA	NA	NA
NA	NA	NA	NA	NA	NA	NA	NA	NA	NA
0	0	0	0	0	0	0	0	0	NA
0	0	0	0	0	0	NA	NA	NA	NA
0	0	0	0	0	0	0	0	0	NA
Fan									
S	S	S	S	S	S	S	S	S	NA
S	S	S	S	S	S	S	NA	NA	NA
0	0	0	0	0	0	0	NA	NA	NA
0	0	0	0	0	0	0	0	0	S
0	0	0	0	0	0	0	S	S	S
0	0	0	0	0	0	0	0	0	0
Bearing									
S	S	S	S	S	S	S	S	S	S
0	0	0	0	0	0	0	0	0	0
S	S	S	S	S	S	S	S	S	S
NA	NA	NA	0	0	0	0	0	0	0
NA	NA	NA	0	0	0	0	0	0	0
Bearing cap									
NA	NA	NA	NA	NA	NA	NA	NA	NA	NA
S	S	S	S	S	S	S	S	S	S
Bearing sealing									
0	0	0	0	0	0	NA	NA	NA	NA
0	0	0	0	0	0	NA	NA	NA	NA
0	0	0	0	0	0	NA	NA	NA	NA
0	0	0	0	0	0	0	0	0	0
0	0	0	0	0	0	0	0	0	0
0	0	0	0	0	0	0	0	0	0
0	0	0	0	0	0	0	0	0	0
0	0	0	0	0	0	0	0	0	0

Frame	63	71	80	90	100	112	132
Other sealing							
Joints sealing with Loctite 5923 (Permatex)	0	0	0	0	0	0	0
Bolt with Loctite 5923 (Permatex)	0	0	0	0	0	0	0
Shaft							
AISI 1040/45	S	S	S	S	S	S	S
AISI 4140	0	0	0	0	0	0	0
AISI 304 (stainless steel)	0	0	0	0	0	0	0
AISI 316 (stainless steel)	0	0	0	0	0	0	0
AISI 420 (stainless steel)	0	0	0	0	0	0	0
Locking shaft device (standard for roller bearing motors)	NA	NA	NA	NA	NA	NA	NA
Second shaft end	0	0	0	0	0	0	0
Tapped center hole	S	S	S	S	S	S	S
Degree of protection							
IP56	0	0	0	0	0	0	0
IP65	0	0	0	0	0	0	0
IP66	0	0	0	0	0	0	0
Painting plan							
202E Primer: One coat with 20 to 55 μm of alkyd oxide red Intermediate: One coat with 20 to 30 μm of isocyanate epoxy paint Finishing: One coat with 100 to 140 μm of epoxy paint N2628 Recommended for pulp and paper, mining and chemical industries	0	0	0	0	0	0	0
202P Primer: One coat with 20 to 55 μm of alkyd oxide red Intermediate: One coat with 20 to 30 μm of isocyanate epoxy paint Finishing: One coat with 70 to 100 μm of polyurethane paint N2677 Recommended for food processing industries.	0	0	0	0	0	0	0
211E Primer: One coat with 100 to 140 μm of epoxy paint N2630. Finishing: One coat with 100 to 140 μm of epoxy paint N2628 Recommended for motors supplied to Petrobras and its suppliers, to be used in refi neries such as petrochemical industries that follow Petrobras specifi cations Note: Meets Petrobras N 1735 Standard (condition 3)	0	0	0	0	0	0	0
211P Primer: One coat with 100 to 140 μm of epoxy paint N2630 Finishing: One coat with 70 to 100 μm of PU paint N2677 Recommended for motors supplied to Petrobras and its suppliers, to be used in refi neries such as petrochemical industries that follow Petrobras specifi cations Note: Meets Petrobras N 1735 Standard (condition 3)	0	0	0	0	0	0	0
212E Primer: One coat with 75 to 105 μm of epoxy paint N1277 Intermediate: One coat with 100 to 140 μm of epoxy paint N2630 Finishing: One coat with 100 to 140 μm of epoxy paint N2628 Recommended for applications in pulp and paper, mining, chemical and petrochemical industries Not: Meets Petrobras N 1735 Standard (condition 4)	0	0	0	0	0	0	0
212P Primer: One coat with 75 to 105 μm of epoxy paint N1277 Intermediate: One coat with 100 to 140 μm of epoxy paint N2630 Finishing: One coat with 70 to 100 μm of PU paint N2677 Recommended for applications in pulp and paper, mining, chemical and petrochemical industries Note: Meets Petrobras N 1735 Standard (condition 4)	0	0	0	0	0	0	0

Notes: 1) Other optional features, on request.
2) Some combinations of optional features are not allowed – then contact WEG.

S (Standard)
NA (Not available)
O (Optional)

160	180	200	225S/M	250S/M	280S/M	315S/M	315L	355M/L	355A/B
Other sealing									
0	0	0	0	0	0	0	0	0	0
0	0	0	0	0	0	0	0	0	0
Shaft									
S	S	S	S	S	S	S	NA	NA	NA
0	0	0	0	0	0	0	S	S	S
0	0	0	0	0	0	0	0	0	0
0	0	0	0	0	0	0	0	0	0
0	0	0	0	0	0	0	0	0	0
0	0	0	0	0	0	0	0	0	0
0	0	0	0	0	0	0	0	0	0
S	S	S	S	S	S	S	S	S	S
Degree of protection									
0	0	0	0	0	0	0	0	0	0
0	0	0	0	0	0	0	0	0	0
0	0	0	0	0	0	0	0	0	0
Painting plan									
0	0	0	0	0	0	0	0	0	0
0	0	0	0	0	0	0	0	0	0
0	0	0	0	0	0	0	0	0	0
0	0	0	0	0	0	0	0	0	0
0	0	0	0	0	0	0	0	0	0
0	0	0	0	0	0	0	0	0	0

Frame	63	71	80	90	100	112	132
213E Primer: One coat with 75 to 90 μm of Silicate Ethyl paint N1661 Intermediate: One coat with 35 to 50 μm of epoxy paint N1202 Finishing: One coat with 240 to 340 μm of epoxy paint N2628 Recommended for off-shore oil platform Note: Meets Petrobras N 1374 Standard (condition 5.2)	0	0	0	0	0	0	0
Inside of terminal box painted (Munsell 2.5 YR 6/14)	0	0	0	0	0	0	0
Inside epoxy painting (Tropicallized)	0	0	0	0	0	0	0
Lubrication							
Mobil Polyrex EM	S	S	S	S	S	S	S
Aeroshell 7	0	0	0	0	0	0	0
Isoflex NBU-15	0	0	0	0	0	0	0
Grease nipple							
Carbon steel grease nipple	NA	NA	NA	NA	NA	NA	NA
Stainless steel grease nipple	NA	NA	NA	NA	NA	NA	NA
Balance							
Balance with half key	NA	NA	S*	S	S	S	S
Vibration							
Grade A	S	S	S	S	S	S	S
Grade B	0	0	0	0	0	0	0
Suitable to take vibration detector SPM (1 x hole M8 on D.E. and N.D.E. shield for vertical reading)	NA	NA	NA	NA	NA	NA	NA
Drain							
Rubber drain plug	NA	NA	NA	NA	NA	NA	NA
Plastic drain plug (open) - Automatic	S	S	S	S	S	S	S
Plastic drain plug (close)	0	0	0	0	0	0	0
Threaded drain plug	0	0	0	0	0	0	0
Stainless steel drain plug	0	0	0	0	0	0	0
T type drain plug	0	0	0	0	0	0	0
Other mechanical optionals							
Drip cover (recommended for vertical shaft down applications)	0	0	0	0	0	0	0
Rubber slinger (recommended for vertical shaft up applications)	NA	NA	NA	0	0	0	0
Stainless steel hardware	0	0	0	0	0	0	0
Grease outlet through the endshield	NA	NA	NA	NA	NA	NA	NA

Notes: 1) Other optional features, on request.
2) Some combinations of optional features are not allowed – then contact WEG.
(*) 4 poles and upwards

S (Standard)
NA (Not available)
O (Optional)

160	180	200	225S/M	250S/M	280S/M	315S/M	315L	355M/L	355A/B
0	0	0	0	0	0	0	0	0	0
0	0	0	0	0	0	0	0	0	0
0	0	0	0	0	0	0	0	0	0
Lubrication									
S	S	S	S	S	S	S	S	S	S
0	0	0	0	0	0	0	0	0	0
0	0	0	0	0	0	0	0	0	0
Grease nipple									
0	0	0	S	S	S	S	S	S	S
0	0	0	0	0	0	0	0	0	0
Balance									
S	S	S	S	S	S	S	S	S	S
Vibration									
S	S	S	S	S	S	S	S	S	S
0	0	0	0	0	0	0	0	0	0
0	0	0	0	0	0	0	0	0	0
Drain									
S	S	S	S	S	S	S	S	S	S
NA	NA	NA	NA	NA	NA	NA	NA	NA	NA
NA	NA	NA	NA	NA	NA	NA	NA	NA	NA
0	0	0	0	0	0	0	0	0	0
0	0	0	0	0	0	0	0	0	0
0	0	0	0	0	0	0	0	0	0
Other mechanical optionals									
0	0	0	0	0	0	0	0	0	NA
0	0	0	0	0	0	0	0	0	0
0	0	0	0	0	0	0	0	0	0
NA	NA	NA	0	0	0	0	0	0	0

Frame	63	71	80	90	100	112	132
Electrical optionals							
Winding thermal protection							
Bimetallic alarm thermal protector	O	O	O	O	O	O	O
Bimetallic tripping thermal protector	O	O	O	O	O	O	O
PT100 two wires, one per phase	O	O	O	O	O	O	O
PT100 two wires, two per phase	NA	NA	NA	NA	NA	NA	NA
PT100 three wires, one per phase	O	O	O	O	O	O	O
PT100 three wires, two per phase	NA	NA	NA	NA	NA	NA	NA
Alarm thermistor	O	O	O	O	O	O	O
Tripping thermistor	O	O	O	O	O	O	O
Bearing thermal protection							
Bimetallic thermal protector	NA	NA	NA	NA	NA	NA	NA
Thermistor	NA	NA	NA	NA	NA	NA	NA
PT-100 two wires	NA	NA	NA	NA	NA	NA	NA
PT-100 three wires	NA	NA	NA	NA	NA	NA	NA
PT-100 three wires (calibrated)	NA	NA	NA	NA	NA	NA	NA
Space heaters							
110-127 V	O	O	O	O	O	O	O
220-240 V	O	O	O	O	O	O	O
110-127 / 220-240 V	NA	NA	NA	NA	NA	O	O
380-480 V	O	O	O	O	O	O	O
Rotation direction							
Both	S	S	S	S	S	S	S
Clockwise rotation direction	O	O	O	O	O	O	O
Counter clockwise rotation direction	O	O	O	O	O	O	O
Nameplate with indication of rotation direction	O	O	O	O	O	O	O
Connection leads							
Leads connection at highest voltage (available only for motors fitted with terminal block)	O	O	O	O	O	O	O
Leads connection at lowest voltage (available only for motors fitted with terminal block)	S	S	S	S	S	S	S
Service factor							
Service factor 1.00	S	S	S	S	S	S	S
Service factor 1.15	O	O	O	O	O	O	O
Insulation class							
F	S	S	S	S	S	S	S
H	O	O	O	O	O	O	O
Forced ventilation kit							
Forced ventilation kit with enconder provision (inform auxiliary motor voltage)	NA	NA	NA	O	O	O	O
Forced ventilation kit without encoder provision (informe auxiliary motor voltage)	NA	NA	NA	O	O	O	O
Encoder	NA	NA	NA	O	O	O	O
Drive end side grounding brush	NA	NA	NA	NA	NA	NA	NA
Non drive end side grounding brush	NA	NA	NA	NA	NA	NA	NA

Notes: 1) Other optional features, on request.
2) Some combinations of optional features are not allowed – then contact WEG.

S (Standard)
NA (Not available)
O (Optional)

160	180	200	225S/M	250S/M	280S/M	315S/M	315L	355M/L	355A/B
Electrical optionals									
Winding thermal protection									
0	0	0	0	0	0	0	0	0	0
0	0	0	0	0	0	0	0	0	0
0	0	0	0	0	0	0	0	0	0
NA	NA	NA	0	0	0	0	0	0	0
0	0	0	0	0	0	0	0	0	0
NA	NA	NA	0	0	0	0	0	0	0
0	0	0	0	0	0	0	0	0	0
S	S	S	S	S	S	S	S	S	S
Bearing thermal protection									
0	0	0	0	0	0	0	0	0	0
0	0	0	0	0	0	0	0	0	0
0	0	0	0	0	0	0	0	0	0
0	0	0	0	0	0	0	0	0	0
0	0	0	0	0	0	0	0	0	0
Space heaters									
0	0	0	0	0	0	0	0	0	0
0	0	0	0	0	0	0	0	0	0
0	0	0	0	0	0	0	0	0	0
0	0	0	0	0	0	0	0	0	0
Rotation direction									
S	S	S	S	S	S	S	S	S	S
0	0	0	0	0	0	0	0	0	0
0	0	0	0	0	0	0	0	0	0
0	0	0	0	0	0	0	0	0	0
Connection leads									
0	0	0	0	0	0	0	0	0	0
S	S	S	S	S	S	S	S	S	S
Service factor									
S	S	S	S	S	S	S	S	S	S
0	0	0	0	0	0	0	0	0	0
Insulation class									
S	S	S	S	S	S	S	S	S	S
0	0	0	0	0	0	0	0	0	0
Forced ventilation kit									
0	0	0	0	0	0	0	0	0	0
0	0	0	0	0	0	0	0	0	0
0	0	0	0	0	0	0	0	0	0
NA	NA	NA	NA	NA	NA	0	0	0	0
NA	NA	NA	0	0	0	0	0	0	0

16. Electrical data

W22 - Standard Efficiency
Exceeds IE1 (1) - EFF2 (2)

Output		Frame	Full load torque (Nm)	Locked rotor current Il/In	Locked rotor torque Tl/Tn	Break-down torque Tb/Tn	Inertia J (kgm²)	Allowable locked rotor time (s)		Weight (kg)	Sound dB (A)	400 V							
												Rated speed (rpm)	% of full load						Full load current In (A)
													Efficiency			Power factor			
kW	HP							Hot	Cold				50	75	100	50	75	100	
II Pole - 3000 rpm - 50 Hz																			
0.12	0.16	63	0.420	3.8	2.3	2.3	0.00011	27	59	4.3	52	2720	45.5	53.5	56.0	0.55	0.68	0.80	0.387
0.18	0.25	63	0.630	4.2	2.4	2.3	0.00013	30	66	4.7	52	2730	50.5	56.5	59.0	0.55	0.69	0.80	0.550
0.25	0.33	63	0.880	4.3	2.5	2.3	0.00016	25	55	5.1	52	2720	52.0	57.0	60.0	0.50	0.65	0.76	0.791
0.37	0.5	71	1.29	4.6	2.3	2.4	0.00027	16	35	5.5	56	2730	62.0	66.5	67.0	0.60	0.75	0.84	0.949
0.55	0.75	71	1.94	4.5	2.2	2.2	0.00033	13	29	6.5	56	2710	65.0	67.0	68.0	0.68	0.81	0.89	1.31
0.75	1	80	2.60	5.1	2.5	2.6	0.00055	14	31	9.5	59	2760	68.5	72.0	72.1	0.62	0.76	0.84	1.79
1.1	1.5	80	3.79	5.9	2.9	2.9	0.00076	14	31	13.5	59	2775	74.0	76.0	76.0	0.65	0.78	0.85	2.46
1.5	2	90S	5.05	6.3	2.7	2.6	0.0017	7	15	15.0	68	2840	77.0	79.5	79.5	0.63	0.76	0.83	3.28
2.2	3	90L	7.48	6.8	2.8	2.9	0.0022	9	20	16.7	68	2810	78.0	80.0	81.5	0.63	0.77	0.85	4.58
3	4	100L	10.0	6.7	2.3	2.8	0.0052	9	20	23.5	67	2870	81.3	83.0	83.5	0.69	0.81	0.87	5.96
4	5.5	112M	13.3	6.8	2.4	3.0	0.0073	9	20	31.0	64	2875	82.0	84.0	85.0	0.71	0.82	0.87	7.81
5.5	7.5	132S	18.1	6.5	2.4	3.0	0.0159	11	24	42.0	68	2910	83.5	86.0	86.5	0.71	0.81	0.87	10.5
7.5	10	132S	24.7	6.4	2.3	2.6	0.0187	11	24	53.0	68	2900	86.0	87.5	87.5	0.72	0.82	0.87	14.2
9.2	12.5	132M	30.2	7.5	2.7	3.1	0.0243	8	18	58.0	68	2910	86.5	88.5	88.5	0.70	0.81	0.86	17.4
11	15	160M	35.9	6.8	2.0	2.7	0.0353	11	24	98.0	67	2930	87.8	88.6	88.4	0.70	0.81	0.86	20.9
15	20	160M	48.9	7.2	2.2	2.8	0.0471	9	20	108	67	2930	89.5	89.8	89.5	0.71	0.81	0.86	28.1
18.5	25	160L	60.1	7.8	2.4	3.1	0.0559	7	15	122	67	2940	90.3	90.7	90.3	0.70	0.80	0.86	34.4
22	30	180M	71.6	7.3	2.0	2.8	0.0965	7	15	156	67	2935	90.7	91.0	90.8	0.76	0.84	0.88	39.7
30	40	200L	96.8	6.3	2.1	2.4	0.1794	18	40	220	72	2960	91.6	92.0	91.6	0.76	0.84	0.87	54.3
37	50	200L	120	6.5	2.2	2.4	0.2063	16	35	232	72	2950	92.0	92.5	92.0	0.76	0.84	0.87	66.7
45	60	225S/M	145	6.9	2.0	2.8	0.3139	10	22	356	75	2960	91.8	92.6	92.4	0.78	0.86	0.89	79.0
55	75	250S/M	178	6.7	2.0	2.7	0.3767	12	26	413	75	2960	92.2	93.0	92.8	0.79	0.86	0.89	96.1
75	100	280S/M	241	6.8	1.8	2.8	1.08	28	62	630	77	2975	92.5	93.5	93.3	0.78	0.86	0.88	132
90	125	280S/M	289	7.0	2.0	2.8	1.18	20	44	664	77	2975	93.0	93.8	93.7	0.80	0.87	0.89	156
110	150	315S/M	353	6.8	1.8	2.7	1.41	26	57	848	77	2980	93.3	94.3	94.0	0.78	0.85	0.88	192
132	175	315S/M	423	6.7	1.8	2.6	1.65	24	53	879	77	2980	93.5	94.3	94.3	0.79	0.86	0.89	227
150	200	315S/M	482	7.0	2.2	3.0	1.87	20	44	880	77	2975	94.0	94.5	94.5	0.77	0.85	0.87	263
160	220	315S/M	513	7.6	2.0	2.8	2.12	21	46	950	77	2980	94.0	94.5	94.5	0.80	0.87	0.90	272
185	250	315S/M	593	7.7	2.0	2.8	1.96	14	31	993	77	2980	94.4	94.6	94.6	0.77	0.84	0.88	321
200	270	315L	641	7.7	2.1	2.8	2.17	17	37	1135	78	2980	94.4	94.7	94.6	0.80	0.87	0.90	339
220	300	315L	705	8.0	2.3	2.8	3.21	14	31	1224	78	2980	94.5	94.8	94.7	0.82	0.88	0.90	373
250	340	315L	802	7.9	2.4	2.8	5.39	14	31	1316	78	2980	94.5	94.8	94.7	0.83	0.88	0.91	419
260	350	315L	835	7.0	2.4	2.5	3.70	20	44	1340	78	2975	94.5	94.8	94.8	0.83	0.89	0.91	435
280	380	315L	898	8.5	2.8	2.8	3.21	14	31	1443	78	2980	94.5	94.9	94.8	0.84	0.88	0.90	474
300	400	315L**	962	7.5	2.5	2.5	4.15	12	26	1500	78	2980	94.8	95.0	95.0	0.84	0.88	0.90	506
315*	430	355M/L	1010	7.8	2.1	2.6	4.01	22	48	1770	80	2985	94.6	94.9	94.8	0.87	0.90	0.91	527
355*	480	355M/L	1140	7.9	2.2	2.8	4.01	14	31	1830	80	2985	94.6	95.0	94.8	0.86	0.90	0.91	594

Notes:
(1) Efficiency values are given according to IEC 60034-2-1. They are calculated according to indirect method, with stray load losses determined by measurement.
(2) The CEMEP reference shown means that the efficiency of motors will exceed EFF2 if tested according to IEC 60034-2.
(*) Fitted with air deflector in the drive end side.
(**) Class "F" insulation ΔT 105 K.

W22 - Standard Efficiency
Exceeds IE1 (1) - EFF2 (2)

Output		380 V								415 V							
		Rated speed	% of full load						Full load current	Rated speed	% of full load						Full load current
			Efficiency			Power Factor					Efficiency			Power Factor			
kW	HP	(rpm)	50	75	100	50	75	100	In (A)	(rpm)	50	75	100	50	75	100	In (A)
II Pole - 3000 rpm - 50 Hz																	
0.12	0.16	2690	48.0	55.0	58.8	0.59	0.74	0.84	0.369	2735	43.0	51.0	53.5	0.52	0.64	0.75	0.416
0.18	0.25	2700	52.5	57.5	59.5	0.60	0.75	0.85	0.541	2750	47.8	54.5	58.0	0.52	0.64	0.76	0.568
0.25	0.33	2685	54.0	59.0	60.0	0.56	0.71	0.81	0.782	2740	50.0	55.5	59.9	0.47	0.60	0.72	0.806
0.37	0.5	2700	64.6	67.5	66.6	0.67	0.81	0.88	0.959	2750	59.1	64.9	66.6	0.55	0.70	0.80	0.966
0.55	0.75	2665	66.4	67.0	66.5	0.74	0.86	0.91	1.38	2735	63.4	66.5	68.4	0.63	0.77	0.86	1.30
0.75	1	2730	70.8	72.7	71.6	0.69	0.82	0.88	1.81	2775	66.2	70.6	71.8	0.56	0.70	0.80	1.82
1.1	1.5	2750	75.3	76.3	75.6	0.71	0.83	0.89	2.48	2790	72.2	75.0	75.9	0.58	0.72	0.81	2.49
1.5	2	2820	78.0	80.1	78.9	0.70	0.81	0.87	3.32	2855	75.0	78.9	79.3	0.57	0.71	0.80	3.29
2.2	3	2790	78.5	80.2	80.8	0.70	0.82	0.88	4.70	2820	77.5	79.8	81.5	0.57	0.72	0.82	4.58
3	4	2855	82.4	83.0	83.0	0.75	0.85	0.89	6.17	2880	80.5	82.4	83.5	0.64	0.77	0.84	5.95
4	5.5	2860	83.0	84.2	84.5	0.77	0.86	0.89	8.08	2885	80.8	83.4	84.8	0.66	0.78	0.85	7.72
5.5	7.5	2895	84.4	86.0	86.0	0.77	0.85	0.89	10.9	2915	82.7	85.5	86.5	0.66	0.78	0.84	10.5
7.5	10	2890	86.8	87.5	87.0	0.78	0.86	0.89	14.7	2910	85.0	87.0	87.5	0.66	0.78	0.84	14.2
9.2	12.5	2900	87.4	88.5	88.4	0.76	0.85	0.89	17.8	2915	85.3	88.0	88.4	0.63	0.76	0.83	17.4
11	15	2920	88.4	88.7	88.1	0.76	0.85	0.88	21.6	2935	87.1	88.3	88.4	0.65	0.77	0.84	20.6
15	20	2945	89.9	89.8	89.1	0.76	0.84	0.88	29.1	2935	89.0	89.7	89.6	0.67	0.78	0.84	27.7
18.5	25	2935	90.8	90.8	90.1	0.75	0.84	0.88	35.5	2945	89.7	90.4	90.3	0.65	0.76	0.84	33.9
22	30	2925	90.9	90.8	90.3	0.80	0.86	0.89	41.6	2940	90.4	91.0	91.0	0.73	0.82	0.87	38.7
30	40	2955	91.8	91.9	91.2	0.80	0.86	0.88	56.8	2965	91.3	92.0	91.8	0.72	0.81	0.86	52.9
37	50	2945	92.2	92.4	91.6	0.80	0.87	0.88	69.7	2950	91.7	92.4	92.1	0.72	0.81	0.85	65.8
45	60	2955	91.9	92.5	92.5	0.82	0.88	0.90	82.1	2960	91.6	92.6	92.4	0.75	0.84	0.88	77.0
55	75	2955	92.3	92.9	92.5	0.83	0.88	0.90	100	2965	91.9	93.0	92.8	0.75	0.84	0.87	94.8
75	100	2970	92.7	93.5	93.1	0.81	0.88	0.89	138	2980	92.2	93.4	93.3	0.75	0.84	0.87	129
90	125	2970	93.1	93.7	93.5	0.83	0.89	0.90	162	2980	92.8	93.7	93.7	0.77	0.85	0.88	152
110	150	2975	93.6	94.4	93.9	0.82	0.87	0.89	200	2980	93.0	94.2	94.0	0.75	0.83	0.87	187
132	175	2975	93.8	94.2	94.1	0.83	0.88	0.90	237	2980	93.2	94.3	94.4	0.76	0.84	0.88	221
150	200	2975	94.2	94.5	94.5	0.80	0.85	0.88	274	2980	94.5	94.7	94.7	0.75	0.82	0.86	256
160	220	2975	94.2	94.5	94.4	0.83	0.89	0.91	283	2980	93.8	94.4	94.5	0.77	0.85	0.89	265
185	250	2975	94.6	94.6	94.5	0.80	0.86	0.89	334	2980	94.2	94.5	94.6	0.74	0.82	0.87	313
200	270	2980	94.5	94.7	94.6	0.83	0.89	0.91	353	2980	94.2	94.6	94.6	0.77	0.85	0.89	330
220	300	2975	94.6	94.8	94.5	0.84	0.89	0.91	389	2980	94.5	94.8	94.8	0.80	0.87	0.89	363
250	340	2975	94.5	94.8	94.5	0.85	0.89	0.91	442	2980	94.3	94.8	94.8	0.81	0.87	0.90	408
260	350	2970	94.3	94.7	94.7	0.85	0.90	0.92	453	2975	94.7	94.9	94.9	0.82	0.88	0.90	424
280	380	2975	94.6	94.8	94.6	0.86	0.89	0.90	500	2980	94.4	94.9	94.9	0.83	0.87	0.90	456
300	400	2975	94.8	94.9	94.9	0.86	0.89	0.91	528	2980	94.8	95.1	95.1	0.82	0.87	0.89	493
315*	430	2980	94.2	94.9	94.8	0.88	0.91	0.91	555	2985	94.6	94.9	94.9	0.86	0.89	0.91	507
355*	480	2980	94.6	94.9	94.6	0.88	0.91	0.91	627	2985	94.6	95.0	94.9	0.84	0.89	0.91	572

W22 - Standard Efficiency
Exceeds IE1 (1) - EFF2 (2)

Output		Frame	Full load torque (Nm)	Locked rotor current Il/In	Locked rotor torque Tl/Tn	Break-down torque Tb/Tn	Inertia J (kgm²)	Allowable locked rotor time (s)		Weight (kg)	Sound dB (A)	400 V							
												Rated speed (rpm)	% of full load						Full load current In (A)
													Efficiency			Power factor			
kW	HP							Hot	Cold				50	75	100	50	75	100	
II Pole - 3000 rpm - 50 Hz																			
Optional Frames																			
0.37	0.5	63	1.32	4.0	2.6	2.4	0.00025	15	33	7.2	52	2670	60.0	64.0	64.0	0.59	0.74	0.83	1.01
0.55	0.75	80	1.91	5.1	2.6	2.6	0.00044	21	46	8.0	59	2755	64.5	68.5	69.0	0.60	0.74	0.83	1.39
0.75	1	71	2.62	5.5	2.8	2.8	0.00051	12	26	9.0	56	2740	71.0	72.0	72.1	0.70	0.82	0.89	1.69
1.1	1.5	90S	3.70	6.3	2.7	2.6	0.0012	7	15	15.0	68	2840	77.0	79.5	79.5	0.63	0.76	0.83	2.41
1.5	2	80	5.22	5.5	2.8	2.7	0.00093	15	33	15.0	59	2745	76.0	77.0	77.2	0.71	0.82	0.87	3.22
1.5	2	90L	5.05	6.3	2.7	2.6	0.0017	7	15	15.0	68	2840	77.0	79.5	79.5	0.63	0.76	0.83	3.28
2.2	3	100L	7.35	6.9	2.2	2.7	0.0045	13	29	27.0	67	2860	81.0	81.5	81.5	0.76	0.85	0.90	4.33
2.2	3	90S	7.48	6.8	2.8	2.9	0.0022	9	20	16.7	68	2810	78.0	80.0	81.5	0.63	0.77	0.85	4.58
3	4	112M	9.97	7.2	2.4	2.8	0.0063	20	44	37.0	64	2875	83.0	83.5	83.5	0.75	0.84	0.89	5.83
3	4	90L**	10.2	6.0	3.4	3.0	0.0025	7	15	23.5	64	2820	81.0	81.5	81.5	0.57	0.71	0.80	6.64
4	5.5	100L	13.3	8.4	3.2	3.4	0.0064	8	18	32.0	67	2885	83.0	84.0	83.5	0.69	0.81	0.87	7.95
4	5.5	132S	13.1	6.5	2.3	2.8	0.0135	13	29	61.0	65	2910	81.5	84.0	85.0	0.67	0.78	0.85	7.99
5.5	7.5	112M	18.3	7.7	2.5	3.0	0.0096	10	22	40.0	64	2870	86.5	87.5	87.5	0.80	0.87	0.90	10.1
5.5	7.5	132M	18.1	6.5	2.4	3.0	0.0159	11	24	42.0	68	2910	83.5	86.0	86.5	0.71	0.81	0.87	10.5
7.5	10	132M	24.7	6.4	2.3	2.6	0.0187	11	24	53.0	68	2900	86.0	87.5	87.5	0.72	0.82	0.87	14.2
9.2	12.5	160M	30.1	6.6	1.8	2.5	0.0353	13	29	93.0	67	2925	87.5	88.1	88.0	0.73	0.83	0.87	17.4
11	15	132M	36.0	8.0	2.7	3.2	0.0280	8	18	74.0	68	2920	88.0	89.5	89.5	0.71	0.81	0.86	20.6
15	20	160L	48.9	7.2	2.2	2.8	0.0471	9	20	108	67	2930	89.5	89.8	89.5	0.71	0.81	0.86	28.1
22	30	160L	71.6	7.8	2.4	3.0	0.0639	7	15	134	67	2935	90.5	90.8	90.6	0.73	0.82	0.87	40.3
22	30	180L	71.6	7.3	2.0	2.8	0.0965	7	15	156	67	2935	90.7	91.0	90.8	0.76	0.84	0.88	39.7
30	40	180L	97.5	7.6	2.3	3.0	0.1301	6	13	194	67	2940	91.5	91.8	91.5	0.78	0.85	0.88	53.8
30	40	200M	96.8	6.3	2.1	2.4	0.1794	18	40	220	72	2960	91.6	92.0	91.6	0.76	0.84	0.87	54.3
37	50	200M	120	6.5	2.2	2.4	0.2063	16	35	232	72	2950	92.0	92.5	92.0	0.76	0.84	0.87	66.7
45	60	200L	146	7.0	2.3	2.5	0.2512	13	29	272	72	2955	92.3	92.6	92.5	0.77	0.85	0.88	79.8
55	75	225S/M	178	7.2	2.1	2.7	0.3767	9	20	394	75	2960	92.2	93.0	92.8	0.81	0.87	0.89	96.1
75	100	250S/M	242	7.8	2.4	3.0	0.5023	9	20	457	75	2965	93.0	93.5	93.3	0.78	0.86	0.89	130
110	150	280S/M	353	7.0	2.0	2.8	1.41	20	44	702	77	2975	93.5	94.2	94.0	0.79	0.86	0.89	190
132	175	280S/M	424	7.2	1.9	2.7	1.65	16	35	759	77	2975	94.0	94.3	94.3	0.81	0.86	0.89	227
200	270	315S/M	641	7.7	2.1	2.8	2.17	17	37	1135	77	2980	94.4	94.7	94.6	0.80	0.87	0.90	339
200	270	355M/L	640	7.4	1.7	2.7	4.56	28	62	1430	80	2985	94.5	94.8	94.7	0.82	0.87	0.89	343
220	300	355M/L	704	7.7	1.8	2.8	4.88	20	44	1496	80	2985	94.5	94.8	94.7	0.83	0.88	0.90	373
250	340	355M/L	800	7.9	2.1	2.8	5.39	20	44	1592	80	2985	94.5	94.8	94.7	0.86	0.88	0.90	423
280	380	355M/L	898	7.6	2.0	2.6	3.21	17	37	1663	80	2980	94.6	94.9	94.8	0.86	0.90	0.91	468

Notes:
(1) Efficiency values are given according to IEC 60034-2-1. They are calculated according to indirect method, with stray load losses determined by measurement.
(2) The CEMEP reference shown means that the efficiency of motors will exceed EFF2 if tested according to IEC 60034-2.
(**) Class "F" insulation ΔT 105 K.

W22 - Standard Efficiency
Exceeds IE1 (1) - EFF2 (2)

Output		380 V								415 V							
		Rated speed	% of full load						Full load current	Rated speed	% of full load						Full load current
			Efficiency			Power Factor					Efficiency			Power Factor			
kW	HP	(rpm)	50	75	100	50	75	100	In (A)	(rpm)	50	75	100	50	75	100	In (A)
II Pole - 3000 rpm - 50 Hz																	
Optional Frames																	
0.37	0.5	2625	62.1	64.6	63.0	0.65	0.78	0.87	1.03	2700	57.5	62.9	64.1	0.54	0.69	0.80	1.00
0.55	0.75	2725	66.8	69.3	68.7	0.68	0.80	0.87	1.40	2770	62.2	67.1	68.6	0.55	0.69	0.79	1.41
0.75	1	2710	71.9	71.9	72.1	0.75	0.86	0.91	1.74	2760	70.0	71.7	72.5	0.65	0.79	0.86	1.67
1.1	1.5	2820	78.0	80.1	78.9	0.70	0.81	0.87	2.43	2855	75.0	78.9	79.3	0.57	0.71	0.80	2.41
1.5	2	2710	76.8	76.7	77.2	0.77	0.85	0.89	3.32	2765	75.3	76.9	77.7	0.67	0.79	0.85	3.16
1.5	2	2820	78.0	80.1	78.9	0.70	0.81	0.87	3.32	2855	75.0	78.9	79.3	0.57	0.71	0.80	3.29
2.2	3	2840	81.4	81.2	80.5	0.80	0.88	0.91	4.56	2870	80.5	81.5	81.9	0.73	0.83	0.88	4.25
2.2	3	2790	78.5	80.2	80.8	0.70	0.82	0.88	4.70	2820	77.5	79.8	81.5	0.57	0.72	0.82	4.58
3	4	2860	83.5	83.4	82.8	0.79	0.87	0.90	6.12	2885	82.4	83.4	83.7	0.71	0.81	0.87	5.73
3	4	2800	82.1	81.7	80.9	0.63	0.76	0.84	6.71	2835	79.8	81.0	81.6	0.52	0.67	0.77	6.64
4	5.5	2870	83.9	84.3	83.2	0.75	0.85	0.90	8.12	2895	81.9	83.6	83.5	0.64	0.77	0.84	7.93
4	5.5	2900	82.5	84.0	84.8	0.73	0.83	0.87	8.24	2920	81.0	84.0	85.0	0.63	0.75	0.82	7.98
5.5	7.5	2860	87.0	87.5	87.2	0.83	0.89	0.91	10.5	2880	86.0	87.5	87.7	0.77	0.85	0.89	9.80
5.5	7.5	2895	84.4	86.0	86.0	0.77	0.85	0.89	10.9	2915	82.7	85.5	86.5	0.66	0.78	0.84	10.5
7.5	10	2890	86.8	87.5	87.0	0.78	0.86	0.89	14.7	2910	85.0	87.0	87.5	0.66	0.78	0.84	14.2
9.2	12.5	2915	87.9	88.0	87.5	0.77	0.86	0.89	17.9	2930	87.0	88.0	88.2	0.69	0.80	0.85	17.1
11	15	2910	88.5	89.5	89.0	0.76	0.84	0.88	21.3	2930	87.5	89.0	89.5	0.66	0.77	0.83	20.6
15	20	2945	89.9	89.8	89.1	0.76	0.84	0.88	29.1	2935	89.0	89.7	89.6	0.67	0.78	0.84	27.7
22	30	2925	90.7	90.7	90.2	0.77	0.84	0.88	42.1	2940	90.2	90.8	90.8	0.70	0.80	0.86	39.2
22	30	2925	90.9	90.8	90.3	0.80	0.86	0.89	41.6	2940	90.4	91.0	91.0	0.73	0.82	0.87	38.7
30	40	2935	91.6	91.6	91.1	0.81	0.87	0.89	56.2	2945	91.3	91.8	91.7	0.75	0.83	0.87	52.3
30	40	2955	91.8	91.9	91.2	0.80	0.86	0.88	56.8	2965	91.3	92.0	91.8	0.72	0.81	0.86	52.9
37	50	2945	92.2	92.4	91.6	0.80	0.87	0.88	69.7	2950	91.7	92.4	92.1	0.72	0.81	0.85	65.8
45	60	2950	92.5	92.5	92.2	0.81	0.87	0.89	83.3	2960	92.0	92.6	92.6	0.73	0.83	0.87	77.7
55	75	2955	92.3	92.8	92.4	0.83	0.88	0.90	100	2960	92.1	93.0	93.0	0.79	0.86	0.88	93.5
75	100	2960	93.2	93.5	93.1	0.82	0.88	0.90	136	2970	92.7	93.4	93.3	0.74	0.83	0.87	129
110	150	2970	93.6	94.1	93.8	0.82	0.87	0.90	198	2975	93.3	93.9	94.0	0.76	0.84	0.88	185
132	175	2970	94.1	94.2	94.1	0.84	0.87	0.90	237	2980	93.9	94.3	94.4	0.79	0.85	0.88	221
200	270	2980	94.5	94.7	94.6	0.83	0.89	0.91	353	2980	94.2	94.6	94.6	0.77	0.85	0.89	330
200	270	2980	94.5	94.8	94.8	0.84	0.88	0.90	356	2985	94.3	94.6	94.7	0.80	0.86	0.89	330
220	300	2985	94.5	95.5	95.9	0.89	0.92	0.93	375	2990	93.9	95.3	96.0	0.86	0.90	0.92	347
250	340	2980	94.6	94.8	94.8	0.87	0.89	0.90	445	2985	94.4	94.8	94.8	0.84	0.87	0.90	408
280	380	2975	94.6	94.8	94.6	0.86	0.89	0.90	500	2980	94.4	94.9	94.9	0.83	0.87	0.90	456

W22 - Standard Efficiency
Exceeds IE1 (1) - EFF2 (2)

Output		Frame	Full load torque (Nm)	Locked rotor current Il/In	Locked rotor torque Tl/Tn	Break-down torque Tb/Tn	Inertia J (kgm²)	Allowable locked rotor time (s)		Weight (kg)	Sound dB (A)	400 V							
												Rated speed (rpm)	% of full load						Full load current In (A)
													Efficiency			Power factor			
kW	HP							Hot	Cold				50	75	100	50	75	100	
IV pole - 1500 rpm - 50 Hz																			
0.12	0.16	63	0.850	3.5	1.8	2.0	0.00033	38	84	5.2	44	1350	46.0	53.0	55.0	0.51	0.64	0.75	0.420
0.18	0.25	63	1.30	3.6	1.8	1.9	0.00044	25	55	6.2	44	1320	52.0	54.0	56.0	0.57	0.71	0.81	0.573
0.25	0.33	71	1.81	3.1	1.6	1.7	0.00038	28	62	5.5	43	1320	52.0	58.5	59.0	0.52	0.66	0.77	0.794
0.37	0.5	71	2.66	3.6	2.1	2.1	0.00055	28	62	7.0	43	1330	59.0	63.0	63.0	0.49	0.63	0.73	1.16
0.55	0.75	80	3.71	4.9	2.0	2.4	0.0019	13	29	9.5	44	1415	65.0	70.0	71.0	0.57	0.72	0.81	1.38
0.75	1	80	5.14	4.9	2.0	2.3	0.0022	13	29	10.5	44	1395	70.0	72.0	72.3	0.63	0.78	0.84	1.78
1.1	1.5	90S	7.40	5.6	2.3	2.4	0.0039	8	18	14.5	47	1420	70.0	76.0	77.0	0.55	0.69	0.79	2.61
1.5	2	90L	10.2	5.5	2.3	2.4	0.0048	8	18	17.0	47	1410	76.5	78.5	79.0	0.58	0.73	0.82	3.34
2.2	3	100L	14.9	5.6	2.4	2.6	0.0065	9	20	23.0	51	1410	80.5	81.5	81.5	0.60	0.74	0.82	4.75
3	4	100L	20.2	6.0	2.8	3.0	0.0084	8	18	30.0	51	1420	80.0	81.0	82.6	0.57	0.72	0.81	6.47
4	5.5	112M	26.5	6.2	2.1	2.5	0.0147	13	29	33.0	55	1440	83.5	84.6	85.0	0.65	0.77	0.83	8.18
5.5	7.5	132S	36.2	6.5	2.1	2.5	0.0349	11	24	47.0	58	1450	84.5	85.6	86.0	0.63	0.77	0.84	11.0
7.5	10	132M	49.3	6.7	2.1	2.9	0.0465	8	18	64.5	58	1455	85.0	86.5	87.0	0.63	0.77	0.84	14.8
9.2	12.5	160M	60.2	6.0	2.0	2.4	0.0633	9	20	93.0	61	1460	86.8	87.5	87.4	0.64	0.76	0.82	18.5
11	15	160M	72.0	6.0	2.1	2.5	0.0753	9	20	96.0	61	1460	87.0	88.0	88.0	0.64	0.76	0.82	22.0
15	20	160L	98.2	6.2	2.2	2.7	0.1054	8	18	121	61	1460	89.0	89.7	89.3	0.66	0.76	0.83	29.2
18.5	25	180M	121	6.6	2.4	2.8	0.1615	12	26	152	61	1465	89.7	90.4	90.2	0.67	0.77	0.84	35.2
22	30	180L	143	6.6	2.4	2.9	0.1884	10	22	164	61	1465	90.0	90.8	90.7	0.66	0.77	0.84	41.7
30	40	200L	195	6.3	2.1	2.6	0.3034	13	29	212	65	1470	91.3	91.7	91.5	0.68	0.78	0.84	56.3
37	50	225S/M	240	6.7	2.3	2.7	0.5599	10	22	342	66	1475	92.0	92.4	92.2	0.73	0.82	0.86	67.4
45	60	225S/M	292	6.9	2.4	2.7	0.6649	10	22	363	66	1475	92.2	92.2	92.6	0.72	0.82	0.86	81.6
55	75	250S/M	356	6.5	2.1	2.5	0.8748	12	26	431	66	1475	92.9	93.2	93.1	0.75	0.85	0.88	96.9
75	100	280S/M	483	6.6	2.0	2.6	1.85	22	48	639	69	1485	93.0	93.5	93.5	0.75	0.83	0.87	133
90	125	280S/M	579	7.2	2.1	2.8	2.17	20	44	673	69	1485	93.2	93.8	93.8	0.75	0.83	0.87	159
110	150	315S/M	705	6.4	2.0	2.4	2.57	26	57	887	71	1490	93.6	94.3	94.1	0.75	0.83	0.86	196
132	175	315S/M	846	6.9	2.3	2.4	3.21	22	48	953	71	1490	93.9	94.5	94.3	0.74	0.83	0.86	235
150	200	315S/M	962	7.0	2.5	2.8	3.77	18	40	1012	71	1490	94.0	94.5	94.5	0.74	0.82	0.86	266
160	220	315S/M	1030	7.3	2.4	2.5	3.77	18	40	1012	71	1490	94.1	94.6	94.5	0.73	0.82	0.86	284
185	250	315S/M	1190	6.9	2.4	2.3	3.63	17	37	1071	71	1490	94.3	94.7	94.6	0.74	0.82	0.86	328
200	270	315L	1280	6.9	2.4	2.3	6.34	16	35	1216	74	1490	94.4	94.8	94.7	0.76	0.84	0.85	359
220	300	315L	1410	7.7	2.6	2.4	4.60	14	31	1330	74	1490	94.5	94.9	94.8	0.74	0.83	0.86	389
250	340	315L	1600	7.8	2.7	2.5	8.12	12	26	1399	74	1490	94.6	94.9	94.8	0.75	0.83	0.86	443
260	350	315L	1670	7.8	2.7	2.5	8.12	12	26	1399	74	1490	94.6	94.9	94.8	0.75	0.83	0.86	460
280	380	315L	1800	7.9	2.7	2.5	9.02	12	26	1496	74	1490	94.6	95.0	94.9	0.74	0.82	0.86	495
300	400	355M/L	1920	7.2	2.2	2.4	9.92	18	40	1560	76	1490	94.6	95.0	94.9	0.74	0.82	0.85	537
315	430	355M/L	2020	7.2	2.4	2.4	9.32	14	31	1670	76	1490	94.6	95.0	94.9	0.74	0.82	0.86	557
330	450	355M/L	2120	6.8	2.2	2.4	10.7	17	37	1769	76	1490	94.6	95.0	94.9	0.75	0.83	0.86	584
355*	480	355M/L	2280	6.9	2.4	2.3	11.7	15	33	1888	76	1490	94.6	95.0	94.9	0.75	0.83	0.86	628
370*	500	355M/L	2370	7.3	2.6	2.4	10.8	11	24	1971	76	1490	94.9	95.1	94.9	0.75	0.83	0.86	654
400*	550	355M/L	2570	7.3	2.6	2.4	10.8	11	24	1971	76	1490	94.7	95.1	94.9	0.74	0.82	0.86	707

Notes:
(1) Efficiency values are given according to IEC 60034-2-1. They are calculated according to indirect method, with stray load losses determined by measurement.
(2) The CEMEP reference shown means that the efficiency of motors will exceed EFF2 if tested according to IEC 60034-2.
(*) Fitted with air deflector in the drive end side.
(**) Class "F" insulation ΔT 105 K.

W22 - Standard Efficiency
Exceeds IE1 (1) - EFF2 (2)

Output		380 V								415 V							
		Rated speed	% of full load						Full load current	Rated speed	% of full load						Full load current
			Efficiency			Power Factor					Efficiency			Power Factor			
kW	HP	(rpm)	50	75	100	50	75	100	In (A)	(rpm)	50	75	100	50	75	100	In (A)
IV pole - 1500 rpm - 50 Hz																	
0.12	0.16	1330	49.6	55.0	55.1	0.56	0.69	0.79	0.419	1360	42.7	50.9	54.0	0.48	0.60	0.71	0.435
0.18	0.25	1290	53.9	54.3	54.3	0.61	0.75	0.84	0.600	1335	50.3	53.3	56.4	0.54	0.68	0.78	0.569
0.25	0.33	1290	56.3	60.4	58.0	0.57	0.72	0.82	0.799	1335	48.0	55.8	58.4	0.49	0.62	0.73	0.816
0.37	0.5	1305	62.5	64.5	62.6	0.54	0.69	0.78	1.15	1345	55.3	60.8	62.5	0.45	0.58	0.69	1.19
0.55	0.75	1400	68.0	71.3	70.9	0.63	0.78	0.85	1.39	1420	62.0	68.4	70.4	0.53	0.68	0.77	1.41
0.75	1	1380	72.2	72.5	71.2	0.69	0.82	0.87	1.84	1405	68.0	71.0	72.4	0.59	0.73	0.81	1.78
1.1	1.5	1405	73.0	76.0	76.5	0.62	0.75	0.83	2.63	1425	67.0	75.0	77.0	0.49	0.64	0.75	2.65
1.5	2	1400	78.5	79.0	79.0	0.65	0.78	0.86	3.35	1415	74.5	78.0	79.0	0.52	0.67	0.77	3.43
2.2	3	1400	80.5	81.0	80.5	0.67	0.79	0.85	4.89	1420	79.0	81.0	81.5	0.55	0.68	0.78	4.82
3	4	1410	81.5	82.0	81.9	0.64	0.77	0.84	6.63	1430	78.0	81.0	82.6	0.52	0.67	0.78	6.48
4	5.5	1430	84.3	85.0	84.5	0.71	0.81	0.86	8.36	1445	82.0	84.0	85.0	0.59	0.72	0.80	8.18
5.5	7.5	1445	85.5	86.0	85.6	0.70	0.81	0.86	11.4	1455	83.2	85.0	85.7	0.58	0.72	0.81	11.0
7.5	10	1450	86.5	86.8	86.8	0.71	0.82	0.87	15.1	1455	83.2	85.7	86.7	0.57	0.72	0.80	15.0
9.2	12.5	1455	87.5	87.6	87.0	0.69	0.79	0.84	19.1	1465	86.1	87.2	87.5	0.60	0.73	0.80	18.3
11	15	1455	87.8	88.2	87.6	0.69	0.80	0.84	22.7	1465	86.1	87.6	88.0	0.59	0.72	0.79	22.0
15	20	1455	89.5	89.7	88.9	0.71	0.79	0.85	30.2	1465	88.4	89.5	89.4	0.62	0.73	0.81	28.8
18.5	25	1460	90.5	90.6	90.0	0.73	0.81	0.87	35.9	1470	89.0	90.1	90.2	0.62	0.73	0.81	35.2
22	30	1460	90.8	91.0	90.5	0.72	0.81	0.87	42.5	1470	89.3	90.5	90.6	0.61	0.73	0.81	41.7
30	40	1465	91.7	91.7	91.2	0.73	0.81	0.86	58.1	1470	90.8	91.5	91.6	0.63	0.75	0.82	55.6
37	50	1470	92.3	92.4	91.9	0.77	0.85	0.87	70.3	1475	91.6	92.3	92.2	0.69	0.79	0.84	66.5
45	60	1470	92.5	92.2	92.3	0.76	0.85	0.87	85.1	1475	91.9	92.1	92.6	0.68	0.79	0.84	80.5
55	75	1470	93.1	93.1	92.7	0.79	0.87	0.89	101	1475	92.6	93.1	93.1	0.72	0.83	0.87	94.5
75	100	1480	93.3	93.5	93.3	0.79	0.85	0.88	139	1485	92.7	93.4	93.5	0.72	0.81	0.86	130
90	125	1480	93.6	93.9	93.6	0.79	0.85	0.88	166	1486	92.8	93.6	93.8	0.72	0.81	0.86	157
110	150	1490	93.8	94.3	93.9	0.79	0.85	0.87	205	1490	93.3	94.2	94.1	0.72	0.81	0.85	191
132	175	1490	94.2	94.5	94.2	0.78	0.85	0.87	245	1490	93.6	94.4	94.3	0.71	0.81	0.85	229
150	200	1490	94.5	94.6	94.6	0.78	0.85	0.88	274	1490	93.6	94.3	94.5	0.70	0.79	0.84	263
160	220	1490	94.4	94.7	94.4	0.77	0.84	0.87	296	1490	93.8	94.5	94.5	0.70	0.80	0.85	277
185	250	1490	94.5	94.7	94.4	0.78	0.84	0.87	342	1490	94.0	94.6	94.6	0.71	0.80	0.85	320
200	270	1490	94.6	94.8	94.5	0.79	0.86	0.88	365	1490	94.2	94.8	94.8	0.73	0.82	0.86	342
220	300	1490	94.7	94.9	94.7	0.78	0.85	0.87	406	1490	94.3	94.8	94.8	0.71	0.81	0.85	380
250	340	1490	95.4	94.9	94.7	0.79	0.85	0.87	461	1490	95.0	94.8	94.8	0.72	0.81	0.85	432
260	350	1490	95.4	94.9	94.7	0.79	0.85	0.87	479	1490	95.0	94.8	94.8	0.72	0.81	0.85	449
280	380	1490	95.6	95.0	94.8	0.77	0.84	0.87	516	1490	95.2	94.9	94.9	0.71	0.80	0.85	483
300	400	1490	94.7	94.8	94.8	0.78	0.84	0.88	546	1490	94.4	94.9	94.9	0.71	0.80	0.84	524
315	430	1490	94.8	94.9	94.9	0.77	0.84	0.87	580	1490	94.4	94.9	94.9	0.71	0.80	0.85	543
330	450	1485	94.6	94.9	94.9	0.74	0.79	0.85	622	1490	94.4	94.9	95.0	0.72	0.81	0.85	569
355*	480	1490	94.7	94.8	94.8	0.78	0.85	0.87	654	1490	94.5	95.0	95.0	0.72	0.81	0.85	612
370*	500	1490	94.5	94.7	94.8	0.78	0.85	0.87	682	1490	94.4	94.9	95.0	0.72	0.81	0.85	637
400*	550	1490	94.8	94.8	94.8	0.77	0.84	0.87	737	1490	94.5	95.0	95.0	0.71	0.80	0.85	689

W22 - Standard Efficiency
Exceeds IE1 (1) - EFF2 (2)

Output		Frame	Full load torque (Nm)	Locked rotor current Il/In	Locked rotor torque Tl/Tn	Break-down torque Tb/Tn	Inertia J (kgm²)	Allowable locked rotor time (s)		Weight (kg)	Sound dB (A)	400 V							
												Rated speed (rpm)	% of full load						Full load current In (A)
													Efficiency			Power factor			
kW	HP							Hot	Cold				50	75	100	50	75	100	
IV pole - 1500 rpm - 50 Hz																			
Optional Frames																			
0.18	0.25	71	1.27	3.3	1.7	1.9	0.00038	30	66	5.5	43	1350	50.0	57.0	58.0	0.50	0.63	0.73	0.614
0.25	0.33	63	1.78	4.1	2.2	2.2	0.00055	23	51	7.2	44	1340	55.0	60.0	60.0	0.52	0.66	0.76	0.791
0.37	0.5	80	2.50	5.0	2.0	2.4	0.00152	23	51	8.5	44	1415	63.0	66.0	67.0	0.57	0.71	0.81	0.984
0.55	0.75	71	3.92	4.0	2.5	2.3	0.00082	23	51	9.5	43	1340	66.0	69.0	69.0	0.50	0.64	0.74	1.55
0.55	0.75	90S	3.71	5.4	2.1	2.4	0.0030	29	64	15.5	49	1415	70.0	73.0	73.0	0.56	0.70	0.78	1.39
0.75	1	90S	5.06	5.4	2.0	2.3	0.0036	20	44	16.5	49	1415	70.5	73.5	73.5	0.57	0.70	0.79	1.86
1.1	1.5	80	7.43	5.8	2.9	3.0	0.0032	10	22	14.5	44	1415	70.5	75.0	75.5	0.56	0.71	0.80	2.63
1.1	1.5	90L	7.40	5.6	2.3	2.4	0.0039	8	18	14.5	47	1420	70.0	76.0	77.0	0.55	0.69	0.79	2.61
1.5	2	100L	10.2	5.4	2.1	2.4	0.0052	21	46	24.0	53	1405	79.0	79.5	79.0	0.64	0.76	0.82	3.34
1.5	2	90S	10.2	5.5	2.3	2.4	0.0048	8	18	17.0	47	1410	76.5	78.5	79.0	0.58	0.73	0.82	3.34
2.2	3	112M	14.6	5.9	1.7	2.5	0.0104	27	59	38.0	56	1440	81.0	82.0	82.0	0.59	0.72	0.79	4.90
2.2	3	90L	14.9	5.8	2.7	2.5	0.0066	8	18	23.0	47	1410	75.0	76.5	76.5	0.57	0.71	0.80	5.19
3	4	112M	19.9	5.9	1.7	2.4	0.0124	16	35	39.5	56	1440	82.5	83.0	83.0	0.61	0.74	0.81	6.44
4	5.5	132S	26.4	6.2	1.5	2.5	0.0285	15	33	57.0	60	1450	83.0	84.5	84.5	0.68	0.80	0.86	7.94
5.5	7.5	112M	36.5	6.3	2.2	2.8	0.0182	11	24	44.0	56	1440	84.0	85.7	85.7	0.57	0.71	0.79	11.7
5.5	7.5	132M	36.2	6.5	2.1	2.5	0.0349	11	24	47.0	58	1450	84.5	85.6	86.0	0.63	0.77	0.84	11.0
7.5	10	132S	49.3	6.7	2.1	2.9	0.0465	8	18	64.5	58	1455	85.0	86.5	87.0	0.63	0.77	0.84	14.8
9.2	12.5	132M	60.4	7.5	2.2	2.8	0.0582	6	13	70.0	58	1455	86.5	87.7	87.7	0.64	0.78	0.85	17.8
11	15	132M/L**	72.2	7.5	2.4	2.7	0.0676	5	11	83.0	58	1455	87.0	88.4	88.0	0.70	0.81	0.88	20.5
11	15	160L	72.0	6.0	2.1	2.5	0.0753	9	20	96.0	61	1460	87.0	88.0	88.0	0.64	0.76	0.82	22.0
15	20	160M	98.2	6.2	2.2	2.7	0.1054	8	18	121	61	1460	89.0	89.7	89.3	0.66	0.76	0.83	29.2
18.5	25	160L	121	6.6	2.4	2.9	0.1123	7	15	135	61	1465	89.5	90.2	90.0	0.64	0.76	0.82	36.2
18.5	25	180L	121	6.6	2.4	2.8	0.1615	12	26	152	61	1465	89.7	90.4	90.2	0.67	0.77	0.84	35.2
22	30	180M	143	6.6	2.4	2.9	0.1884	10	22	164	61	1465	90.0	90.8	90.7	0.66	0.77	0.84	41.7
30	40	180L	196	6.7	2.9	2.9	0.2075	10	22	190	61	1460	90.5	91.2	91.0	0.63	0.74	0.82	58.0
30	40	200M	195	6.3	2.1	2.6	0.3034	13	29	212	65	1470	91.3	91.7	91.5	0.68	0.78	0.84	56.3
37	50	200L	241	6.6	2.3	2.5	0.3735	12	26	237	65	1470	92.0	92.4	92.0	0.71	0.81	0.85	68.3
45	60	200L**	292	6.6	2.3	2.5	0.3735	6	13	255	65	1475	92.3	92.7	92.5	0.65	0.76	0.82	85.6
55	75	225S/M	356	7.0	2.4	2.7	0.8748	9	20	394	66	1475	92.8	93.1	93.1	0.72	0.82	0.82	104
75	100	250S/M	484	7.6	2.4	3.0	1.12	8	18	496	66	1480	93.1	93.4	93.5	0.73	0.82	0.87	133
110	150	280S/M	708	6.8	2.1	2.6	2.57	16	35	735	69	1485	93.5	94.2	94.1	0.75	0.83	0.87	194
132	175	280S/M	849	7.2	2.3	2.6	3.21	14	31	797	69	1485	93.7	94.4	94.3	0.74	0.83	0.86	235
200	270	315S/M	1280	6.9	2.4	2.3	6.34	16	35	1216	71	1490	94.4	94.8	94.7	0.76	0.84	0.87	350
200	270	355M/L	1280	6.3	1.8	2.0	6.34	18	40	1378	76	1490	94.5	94.9	94.9	0.74	0.81	0.85	358
220	300	355M/L	1410	6.4	2.0	2.2	6.89	18	40	1414	76	1490	94.6	94.9	94.8	0.73	0.81	0.85	394
250	340	355M/L	1600	6.8	2.1	2.4	8.12	18	40	1470	76	1490	94.6	95.0	94.9	0.73	0.82	0.85	447
260	350	355M/L	1670	6.4	2.4	2.4	8.12	14	31	1571	76	1490	94.6	95.0	94.9	0.73	0.82	0.85	465
280	380	355M/L	1800	6.6	2.1	2.4	9.02	14	31	1510	76	1490	94.6	95.0	94.9	0.74	0.82	0.85	501
300	400	315L**	1920	7.6	2.5	2.5	9.92	11	24	1540	78	1490	95.4	95.8	95.8	0.72	0.80	0.85	532
315	430	315L**	2020	7.6	2.5	2.5	9.92	11	24	1540	78	1490	95.4	95.8	95.8	0.72	0.80	0.85	558

Notes:
(1) Efficiency values are given according to IEC 60034-2-1. They are calculated according to indirect method, with stray load losses determined by measurement.
(2) The CEMEP reference shown means that the efficiency of motors will exceed EFF2 if tested according to IEC 60034-2.
(**) Class "F" insulation ΔT 105 K.

W22 - Standard Efficiency
Exceeds IE1 (1) - EFF2 (2)

Output		380 V								415 V							
		Rated speed	% of full load						Full load current	Rated speed	% of full load						Full load current
			Efficiency			Power Factor					Efficiency			Power Factor			
kW	HP	(rpm)	50	75	100	50	75	100	In (A)	(rpm)	50	75	100	50	75	100	In (A)
IV pole - 1500 rpm - 50 Hz																	
Optional Frames																	
0.18	0.25	1325	52.9	58.6	57.6	0.54	0.68	0.78	0.609	1365	47.2	55.3	57.5	0.48	0.60	0.70	0.622
0.25	0.33	1320	57.5	61.0	59.6	0.57	0.71	0.80	0.797	1350	52.3	58.4	59.8	0.48	0.62	0.73	0.797
0.37	0.5	1405	65.4	67.0	66.7	0.62	0.76	0.84	1.00	1425	60.6	64.7	66.6	0.53	0.67	0.77	1.00
0.55	0.75	1315	68.7	70.2	68.3	0.55	0.69	0.78	1.57	1350	62.9	67.6	68.7	0.45	0.59	0.70	1.59
0.55	0.75	1405	71.6	73.4	72.3	0.61	0.74	0.81	1.43	1420	68.6	72.3	73.1	0.52	0.66	0.75	1.40
0.75	1	1405	72.0	73.9	72.8	0.62	0.75	0.82	1.91	1420	68.9	72.8	73.7	0.52	0.66	0.76	1.86
1.1	1.5	1405	73.3	76.4	75.7	0.63	0.77	0.85	2.60	1420	67.3	73.1	75.1	0.51	0.65	0.76	2.68
1.1	1.5	1405	73.0	76.0	76.5	0.62	0.75	0.83	2.63	1425	67.0	75.0	77.0	0.49	0.64	0.75	2.65
1.5	2	1390	79.6	79.1	77.7	0.69	0.79	0.84	3.49	1415	78.1	79.4	79.6	0.60	0.73	0.80	3.28
1.5	2	1400	78.5	79.0	79.0	0.65	0.78	0.86	3.35	1415	74.5	78.0	79.0	0.52	0.67	0.77	3.43
2.2	3	1435	82.2	82.3	81.5	0.65	0.76	0.82	5.00	1445	79.9	81.5	82.0	0.55	0.68	0.76	4.91
2.2	3	1390	76.0	77.0	76.0	0.65	0.75	0.83	5.30	1420	73.0	76.0	76.5	0.53	0.66	0.76	5.26
3	4	1435	83.8	83.3	82.5	0.67	0.78	0.84	6.58	1445	81.1	82.5	83.1	0.56	0.70	0.78	6.44
4	5.5	1445	84.1	84.7	83.9	0.74	0.84	0.88	8.23	1455	81.9	84.1	84.5	0.63	0.76	0.83	7.93
5.5	7.5	1435	85.5	86.2	85.4	0.66	0.77	0.82	11.9	1445	82.4	84.9	85.4	0.52	0.66	0.75	11.9
5.5	7.5	1445	85.5	86.0	85.6	0.70	0.81	0.86	11.4	1455	83.2	85.0	85.7	0.58	0.72	0.81	11.0
7.5	10	1450	86.5	86.8	86.8	0.71	0.82	0.87	15.1	1455	83.2	85.7	86.7	0.57	0.72	0.80	15.0
9.2	12.5	1450	87.3	87.8	87.4	0.70	0.82	0.87	18.4	1455	85.3	87.1	87.5	0.59	0.73	0.82	17.8
11	15	1450	87.5	88.4	88.0	0.75	0.84	0.89	21.4	1460	86.5	88.4	88.4	0.67	0.79	0.86	20.1
11	15	1455	87.8	88.2	87.6	0.69	0.80	0.84	22.7	1465	86.1	87.6	88.0	0.59	0.72	0.79	22.0
15	20	1455	89.5	89.7	88.9	0.71	0.79	0.85	30.2	1465	88.4	89.5	89.4	0.62	0.73	0.81	28.8
18.5	25	1460	90.1	90.3	89.7	0.69	0.79	0.84	37.3	1470	88.9	90.0	90.1	0.60	0.73	0.80	35.7
18.5	25	1460	90.5	90.6	90.0	0.73	0.81	0.87	35.9	1470	89.0	90.1	90.2	0.62	0.73	0.81	35.2
22	30	1460	90.8	91.0	90.5	0.72	0.81	0.87	42.5	1470	89.3	90.5	90.6	0.61	0.73	0.81	41.7
30	40	1455	91.3	91.4	90.8	0.69	0.78	0.85	59.1	1465	89.8	90.9	91.0	0.59	0.71	0.79	58.1
30	40	1465	91.7	91.7	91.2	0.73	0.81	0.86	58.1	1470	90.8	91.5	91.6	0.63	0.75	0.82	55.6
37	50	1465	92.3	92.4	91.7	0.76	0.84	0.87	70.5	1470	91.5	92.2	92.1	0.66	0.78	0.83	67.3
45	60	1470	93.1	93.0	92.5	0.72	0.81	0.86	85.9	1475	91.3	92.2	92.3	0.58	0.71	0.78	87.0
55	75	1470	93.0	93.0	92.7	0.76	0.84	0.83	109	1475	92.5	93.1	93.3	0.69	0.80	0.81	101
75	100	1475	93.4	93.4	93.2	0.78	0.85	0.89	137	1480	93.6	93.2	93.5	0.69	0.79	0.85	131
110	150	1485	93.7	94.0	93.9	0.78	0.85	0.88	202	1485	93.3	94.1	94.1	0.72	0.81	0.86	189
132	175	1480	93.9	94.3	94.1	0.77	0.85	0.87	245	1485	93.5	94.4	94.4	0.71	0.81	0.85	229
200	270	1490	94.6	94.8	94.5	0.79	0.86	0.88	365	1490	94.2	94.8	94.8	0.73	0.82	0.86	342
200	270	1490	94.7	94.9	94.9	0.78	0.83	0.86	372	1490	94.3	94.8	94.9	0.71	0.79	0.84	349
220	300	1490	94.7	94.7	94.7	0.77	0.83	0.86	410	1490	94.4	94.8	94.8	0.70	0.79	0.84	384
250	340	1490	94.7	94.8	94.8	0.77	0.84	0.86	466	1490	94.4	94.9	94.9	0.70	0.80	0.84	436
260	350	1490	94.7	94.8	94.8	0.77	0.84	0.86	485	1490	94.4	94.9	94.9	0.70	0.80	0.84	454
280	380	1490	94.7	94.8	94.8	0.77	0.84	0.86	522	1490	94.4	94.9	95.0	0.71	0.80	0.84	488
300	400	1490	95.6	95.8	95.8	0.76	0.82	0.86	553	1490	95.2	95.7	95.8	0.69	0.78	0.84	519
315	430	1490	95.6	95.8	95.8	0.76	0.82	0.86	580	1490	95.2	95.7	95.8	0.69	0.78	0.84	550

W22 - Standard Efficiency
Exceeds IE1 (1)

Output		Frame	Full load torque (Nm)	Locked rotor current Il/In	Locked rotor torque Tl/Tn	Break-down torque Tb/Tn	Inertia J (kgm²)	Allowable locked rotor time (s)		Weight (kg)	Sound dB (A)	400 V							
												Rated speed (rpm)	% of full load						Full load current In (A)
													Efficiency			Power factor			
kW	HP							Hot	Cold				50	75	100	50	75	100	
VI Pole - 1000 rpm - 50 Hz																			
0.12	0.16	63	1.34	2.6	1.7	1.6	0.00051	46	101	6.7	43	855	40.7	46.7	45.5	0.49	0.60	0.71	0.536
0.18	0.25	71	1.91	3.1	2.2	2.2	0.00077	30	66	9.0	43	900	46.0	53.0	55.0	0.38	0.49	0.58	0.814
0.25	0.33	71	2.67	3.1	2.2	2.2	0.00093	30	66	11.5	43	895	48.0	55.0	57.0	0.38	0.48	0.58	1.09
0.37	0.5	80	3.91	3.6	1.7	1.7	0.0019	16	35	12.1	43	905	55.0	60.0	63.0	0.50	0.64	0.75	1.13
0.55	0.75	80	5.65	4.5	2.3	2.3	0.0030	10	22	15.5	43	930	60.0	65.0	67.0	0.50	0.63	0.73	1.62
0.75	1	90S	7.79	4.2	1.8	2.1	0.0047	17	37	18.0	45	920	68.0	70.0	70.0	0.51	0.65	0.75	2.06
1.1	1.5	90L	11.4	4.8	2.7	2.7	0.0062	9	20	22.0	45	925	72.5	74.0	72.5	0.47	0.60	0.72	3.04
1.5	2	100L	15.6	4.4	1.9	2.2	0.0093	21	46	27.0	44	920	76.0	77.0	76.0	0.52	0.66	0.73	3.90
2.2	3	112M	22.4	5.1	2.3	2.5	0.0165	17	37	37.0	48	940	78.0	78.5	78.0	0.53	0.66	0.74	5.50
3	4	132S	30.0	5.3	2.0	2.2	0.0340	20	44	55.0	52	955	80.0	82.7	82.5	0.58	0.70	0.77	6.82
4	5.5	132M	39.8	5.8	2.3	2.4	0.0446	19	42	59.0	52	960	81.5	83.6	84.2	0.54	0.66	0.74	9.27
5.5	7.5	132M	54.7	6.2	2.3	2.9	0.0604	19	42	72.0	52	960	82.5	84.5	84.5	0.51	0.64	0.72	13.0
7.5	10	160M	74.3	5.4	1.9	2.3	0.1077	12	26	103	56	965	85.3	85.5	85.3	0.64	0.76	0.83	15.3
9.2	12.5	160L	91.1	5.7	2.0	2.4	0.1293	10	22	113	56	965	86.0	86.5	86.0	0.66	0.76	0.83	18.6
11	15	160L	109	5.8	2.1	2.4	0.1580	11	24	127	56	965	87.0	87.5	87.2	0.65	0.77	0.83	21.9
15	20	180L	148	6.8	2.3	2.7	0.2620	6	13	166	56	970	88.0	88.5	88.2	0.72	0.82	0.87	28.2
18.5	25	200L	181	5.7	2.1	2.4	0.3408	12	26	190	60	975	88.3	89.3	88.9	0.64	0.76	0.82	36.6
22	30	200L	216	6.0	2.2	2.4	0.4037	13	29	218	60	975	89.5	90.0	89.7	0.67	0.77	0.83	42.7
30	40	225S/M	293	6.8	2.1	2.7	0.9414	12	26	359	61	980	91.0	91.5	91.2	0.74	0.83	0.86	55.2
37	50	250S/M	359	6.7	2.1	2.4	1.16	14	31	425	61	985	91.7	91.9	91.7	0.74	0.83	0.86	67.7
45	60	280S/M	437	6.0	1.9	2.3	2.07	18	40	576	65	985	92.0	92.5	92.2	0.69	0.79	0.83	84.9
55	75	280S/M	534	6.0	2.2	2.5	2.41	20	44	607	65	985	92.7	92.7	92.6	0.64	0.75	0.81	106
75	100	315S/M	724	6.4	2.0	2.4	3.22	22	48	837	67	990	93.0	93.2	93.0	0.68	0.78	0.83	140
90	125	315S/M	869	6.2	2.0	2.2	3.57	18	40	883	67	990	93.4	93.6	93.4	0.70	0.80	0.83	168
110	150	315S/M	1060	6.2	2.0	2.2	4.83	20	44	941	67	990	93.7	94.0	93.8	0.70	0.80	0.83	204
132	175	315S/M	1270	6.2	2.1	2.2	5.29	18	40	1012	67	990	94.0	94.2	94.1	0.73	0.82	0.85	238
150	200	355M/L	1440	5.6	1.8	2.0	5.79	38	84	1340	73	995	94.2	94.5	94.5	0.64	0.74	0.79	290
160	220	315L	1540	6.5	2.2	2.3	9.53	14	31	1203	68	990	94.1	94.4	94.4	0.69	0.79	0.83	295
185	250	315L	1790	7.1	2.3	2.4	8.60	12	26	1346	68	990	94.2	94.5	94.6	0.70	0.79	0.83	340
200	270	315L	1930	7.3	2.4	2.5	12.0	12	26	1488	68	990	94.3	94.6	94.6	0.70	0.80	0.83	368
220	300	315L	2120	6.8	2.3	2.3	10.7	15	33	1563	68	990	94.4	94.7	94.7	0.70	0.80	0.83	404
250	340	355M/L	2410	6.0	2.1	2.1	14.3	32	70	1752	73	990	94.4	94.7	94.7	0.65	0.75	0.80	476
260	350	355M/L	2510	6.0	2.0	2.0	14.3	32	70	1752	73	990	94.4	94.7	94.7	0.65	0.75	0.80	495
280	380	355M/L	2700	6.2	2.1	2.1	14.3	28	62	1839	73	990	94.5	94.8	94.8	0.64	0.75	0.80	533
315*	430	355M/L	3020	6.2	2.2	2.2	15.0	28	62	1979	73	995	94.5	94.8	94.8	0.66	0.76	0.81	592
Optional Frames																			
0.25	0.33	80	2.60	3.4	1.8	1.9	0.0015	26	57	8.5	43	920	51.0	58.0	60.0	0.52	0.65	0.76	0.791
0.75	1	90L	7.79	4.2	1.8	2.1	0.0047	17	37	18.0	45	920	68.0	70.0	70.0	0.51	0.65	0.75	2.06
1.5	2	112M	15.2	5.2	2.0	2.4	0.0147	21	46	36.0	48	945	75.5	77.5	77.0	0.53	0.66	0.75	3.75
3	4	112M	30.5	5.4	2.3	2.5	0.0257	15	33	44.0	48	940	81.0	82.5	82.0	0.55	0.68	0.75	7.04
3	4	132M	30.0	5.3	2.0	2.2	0.0340	20	44	55.0	52	955	80.0	82.7	82.5	0.58	0.70	0.77	6.82
4	5.5	132S	39.8	5.8	2.3	2.4	0.0446	19	42	59.0	52	960	81.5	83.6	84.2	0.54	0.66	0.74	9.27
7.5	10	160L	74.3	5.4	1.9	2.3	0.1077	12	26	103	56	965	85.3	85.5	85.3	0.64	0.76	0.83	15.3
11	15	160M	109	5.8	2.1	2.4	0.1580	11	24	127	56	965	87.0	87.5	87.2	0.65	0.77	0.83	21.9
15	20	180M	148	6.8	2.3	2.7	0.2620	6	13	166	56	970	88.0	88.5	88.2	0.72	0.82	0.87	28.2
18.5	25	200M	181	5.7	2.1	2.4	0.3408	12	26	190	60	975	88.3	89.3	88.9	0.64	0.76	0.82	36.6
22	30	200M	216	6.0	2.2	2.4	0.4037	13	29	218	60	975	89.5	90.0	89.7	0.67	0.77	0.83	42.7
37	50	225S/M	359	6.8	2.1	2.5	1.22	11	24	390	61	985	91.7	91.9	91.7	0.74	0.83	0.86	67.7
45	60	250S/M	437	6.5	2.1	2.3	1.43	15	33	466	61	985	92.2	92.4	92.2	0.75	0.84	0.87	81.0
75	100	280S/M	728	6.5	2.0	2.5	3.22	14	31	682	65	985	93.0	93.1	93.0	0.68	0.79	0.83	140
160	220	355M/L	1540	5.6	1.8	2.0	9.94	32	70	1416	73	990	94.2	94.6	94.5	0.64	0.74	0.79	309
185	250	355M/L	1790	6.0	2.0	2.2	10.4	30	66	1530	73	990	94.3	94.6	94.6	0.63	0.74	0.79	357
200	270	355M/L	1930	6.0	2.0	2.1	12.0	32	70	1600	73	990	94.4	94.7	94.7	0.64	0.75	0.80	381
220	300	355M/L	2120	6.4	2.1	2.2	13.5	30	66	1678	73	990	94.4	94.8	94.7	0.64	0.74	0.80	419
250	340	315L**	2410	7.0	2.5	2.5	10.9	11	24	0.0	68	990	94.8	95.1	95.1	0.65	0.77	0.81	468
260	350	315L**	2510	8.0	2.8	2.8	10.9	9	20	0.0	68	990	94.8	95.0	95.0	0.60	0.72	0.78	506

Notes:
(1) Efficiency values are given according to IEC 60034-2-1. They are calculated according to indirect method, with stray load losses determined by measurement.
(*) Fitted with air deflector in the drive end side.
(**) Class "F" insulation ΔT 105 K.

W22 - Standard Efficiency
Exceeds IE1 (1)

Output		380 V								415 V							
		Rated speed	% of full load						Full load current	Rated speed	% of full load						Full load current
			Efficiency			Power Factor					Efficiency			Power Factor			
kW	HP	(rpm)	50	75	100	50	75	100	In (A)	(rpm)	50	75	100	50	75	100	In (A)
VI Pole - 1000 rpm - 50 Hz																	
0.12	0.16	845	46.2	50.6	47.6	0.52	0.64	0.76	0.504	860	36.2	42.8	43.2	0.48	0.57	0.67	0.577
0.18	0.25	885	49.3	55.1	55.9	0.41	0.52	0.62	0.789	905	42.9	50.5	53.7	0.37	0.46	0.55	0.848
0.25	0.33	880	51.8	57.3	57.6	0.41	0.53	0.63	1.05	905	45.0	52.6	55.5	0.36	0.45	0.54	1.16
0.37	0.5	890	57.0	62.0	65.0	0.54	0.69	0.80	1.08	910	55.0	60.0	62.0	0.47	0.60	0.72	1.15
0.55	0.75	920	62.0	65.8	68.0	0.54	0.67	0.77	1.60	935	58.0	64.0	66.0	0.47	0.59	0.68	1.70
0.75	1	905	70.1	70.6	68.9	0.56	0.70	0.78	2.12	925	65.9	69.1	70.1	0.47	0.61	0.71	2.10
1.1	1.5	915	73.2	76.4	75.6	0.52	0.67	0.77	2.87	930	71.3	71.4	72.5	0.42	0.55	0.67	3.15
1.5	2	910	77.6	77.2	74.8	0.57	0.70	0.76	4.01	925	74.4	76.3	76.3	0.48	0.62	0.70	3.91
2.2	3	930	79.8	78.9	77.3	0.58	0.71	0.78	5.54	945	76.0	77.4	77.9	0.48	0.62	0.71	5.53
3	4	950	81.0	83.0	82.0	0.61	0.72	0.79	7.04	960	79.0	82.5	82.6	0.53	0.66	0.74	6.83
4	5.5	960	82.7	84.2	84.0	0.58	0.73	0.78	9.28	965	80.0	82.9	83.9	0.52	0.64	0.72	9.21
5.5	7.5	955	83.8	85.1	84.4	0.56	0.69	0.76	13.0	965	81.1	83.8	84.3	0.47	0.60	0.69	13.2
7.5	10	960	86.2	85.6	84.7	0.69	0.80	0.85	15.8	970	84.3	85.2	85.4	0.60	0.73	0.81	15.1
9.2	12.5	960	86.8	86.6	85.4	0.71	0.79	0.85	19.3	970	85.1	86.2	86.2	0.62	0.73	0.81	18.3
11	15	960	87.6	87.5	86.6	0.69	0.80	0.85	22.7	970	86.4	87.3	87.4	0.61	0.74	0.81	21.6
15	20	970	88.5	88.4	87.7	0.76	0.85	0.89	29.2	970	87.4	88.3	88.4	0.68	0.79	0.85	27.8
18.5	25	970	89.3	89.6	88.7	0.70	0.80	0.85	37.3	975	87.3	88.8	88.8	0.59	0.72	0.79	36.7
22	30	970	90.3	90.2	89.4	0.72	0.81	0.85	44.0	975	88.6	89.6	89.7	0.62	0.73	0.81	42.1
30	40	975	91.2	91.3	90.7	0.78	0.85	0.87	57.8	980	90.6	91.4	91.2	0.71	0.81	0.85	53.8
37	50	980	91.9	91.7	91.2	0.77	0.85	0.87	70.9	985	91.4	91.9	91.8	0.71	0.81	0.85	66.0
45	60	980	92.3	92.5	91.9	0.74	0.82	0.85	87.5	985	91.6	92.3	92.2	0.65	0.76	0.81	83.8
55	75	980	93.0	92.7	92.3	0.69	0.78	0.83	109	985	92.3	92.5	92.6	0.60	0.72	0.79	105
75	100	990	93.5	93.4	92.9	0.73	0.81	0.85	144	990	92.7	93.1	93.0	0.64	0.75	0.81	139
90	125	990	93.7	93.6	93.1	0.74	0.83	0.84	175	990	93.1	93.5	93.4	0.67	0.78	0.82	163
110	150	989	93.6	93.7	93.7	0.74	0.83	0.84	212	990	93.4	93.9	93.8	0.67	0.78	0.82	199
132	175	985	94.3	94.2	93.9	0.78	0.85	0.87	245	990	93.7	94.1	94.1	0.69	0.80	0.83	235
150	200	990	94.5	94.8	94.8	0.69	0.77	0.82	293	995	93.8	94.4	94.4	0.61	0.71	0.76	291
160	220	985	94.3	94.4	94.2	0.73	0.81	0.84	307	990	93.8	94.3	94.4	0.66	0.77	0.82	288
185	250	990	94.4	94.5	94.4	0.74	0.81	0.84	354	990	93.9	94.4	94.7	0.67	0.77	0.82	331
200	270	990	94.5	94.6	94.4	0.74	0.82	0.84	383	990	94.0	94.5	94.6	0.67	0.78	0.82	359
220	300	990	94.6	94.7	94.5	0.74	0.82	0.84	421	990	94.2	94.7	94.8	0.67	0.78	0.82	394
250	340	990	94.6	94.7	94.6	0.69	0.78	0.82	490	990	94.2	94.6	94.7	0.62	0.73	0.78	471
260	350	990	94.6	94.7	94.6	0.69	0.78	0.82	509	990	94.2	94.6	94.7	0.62	0.73	0.78	490
280	380	990	94.7	94.8	94.7	0.68	0.78	0.82	548	990	94.3	94.7	94.8	0.61	0.72	0.78	527
315*	430	995	94.7	94.8	94.7	0.70	0.79	0.83	609	995	94.3	94.7	94.8	0.62	0.73	0.79	585
Optional Frames																	
0.25	0.33	905	54.9	60.0	59.6	0.56	0.70	0.80	0.797	930	47.7	55.6	59.0	0.50	0.62	0.73	0.808
0.75	1	905	70.1	70.6	68.9	0.56	0.70	0.78	2.12	925	65.9	69.1	70.1	0.47	0.61	0.71	2.10
1.5	2	940	76.9	77.8	76.3	0.58	0.72	0.78	3.83	950	74.1	76.8	77.1	0.50	0.63	0.72	3.76
3	4	935	82.2	82.7	81.3	0.60	0.73	0.78	7.19	945	79.5	81.9	82.1	0.50	0.64	0.72	7.06
3	4	950	81.0	83.0	82.0	0.61	0.72	0.79	7.04	960	79.0	82.5	82.6	0.53	0.66	0.74	6.83
4	5.5	960	82.7	84.2	84.0	0.58	0.73	0.78	9.28	965	80.0	82.9	83.9	0.52	0.64	0.72	9.21
7.5	10	960	86.2	85.6	84.7	0.69	0.80	0.85	15.8	970	84.3	85.2	85.4	0.60	0.73	0.81	15.1
11	15	960	87.6	87.5	86.6	0.69	0.80	0.85	22.7	970	86.4	87.3	87.4	0.61	0.74	0.81	21.6
15	20	970	88.5	88.4	87.7	0.76	0.85	0.89	29.2	970	87.4	88.3	88.4	0.68	0.79	0.85	27.8
18.5	25	970	89.3	89.6	88.7	0.70	0.80	0.85	37.3	975	87.3	88.8	88.8	0.59	0.72	0.79	36.7
22	30	970	90.3	90.2	89.4	0.72	0.81	0.85	44.0	975	88.6	89.6	89.7	0.62	0.73	0.81	42.1
37	50	980	91.9	91.7	91.2	0.77	0.85	0.87	70.9	985	91.5	91.7	91.9	0.71	0.81	0.85	65.9
45	60	980	92.2	92.1	91.6	0.78	0.86	0.88	84.8	985	92.0	92.4	92.2	0.72	0.82	0.86	79.0
75	100	980	93.3	93.0	92.7	0.72	0.82	0.85	145	985	92.6	93.0	93.0	0.64	0.76	0.81	139
160	220	990	93.5	95.2	95.2	0.73	0.80	0.84	304	990	92.5	94.9	95.4	0.63	0.74	0.80	292
185	250	990	93.5	94.4	94.8	0.73	0.80	0.83	357	990	92.5	94.0	94.8	0.63	0.72	0.79	344
200	270	990	94.0	94.7	94.8	0.74	0.81	0.83	386	990	93.0	94.3	94.8	0.66	0.75	0.79	372
220	300	990	93.8	95.0	95.3	0.72	0.80	0.82	428	995	93.0	94.6	95.3	0.62	0.74	0.79	407
250	340	985	94.9	95.0	95.0	0.67	0.79	0.83	482	990	94.8	95.1	95.1	0.62	0.74	0.79	463
260	350	990	94.8	95.0	95.0	0.65	0.76	0.81	513	990	94.8	95.1	95.1	0.56	0.69	0.76	500

W22 - Standard Efficiency

Output		Frame	Full load torque (Nm)	Locked rotor current Il/In	Locked rotor torque Tl/Tn	Break-down torque Tb/Tn	Inertia J (kgm²)	Allowable locked rotor time (s)		Weight (kg)	Sound dB (A)	400 V							
												Rated speed (rpm)	% of full load						Full load current In (A)
													Efficiency			Power factor			
kW	HP							Hot	Cold				50	75	100	50	75	100	
VIII pole - 750 rpm - 50 Hz																			
0.12	0.16	71	1.74	2.2	2.1	2.0	0.00079	84	185	10.7	41	660	36.3	43.4	45.6	0.37	0.45	0.53	0.717
0.18	0.25	80	2.47	2.8	2.2	2.4	0.0021	29	64	12.6	42	695	36.2	44.1	48.6	0.45	0.53	0.62	0.862
0.25	0.33	80	3.49	3.8	2.1	2.2	0.0027	27	59	13.0	42	685	46.0	51.0	53.0	0.45	0.56	0.66	1.03
0.37	0.5	90S	5.16	3.0	1.9	1.8	0.0039	32	70	15.4	43	685	50.6	56.5	57.4	0.44	0.55	0.64	1.45
0.55	0.75	90L	7.79	3.3	1.9	2.0	0.0056	25	55	16.5	43	675	58.0	60.0	60.0	0.43	0.56	0.66	2.01
0.75	1	100L	10.2	3.5	1.8	2.4	0.0079	33	73	23.8	50	705	62.0	67.2	67.8	0.42	0.53	0.62	2.58
1.1	1.5	100L	15.0	4.0	1.7	2.3	0.0118	27	59	28.5	50	700	69.3	72.3	71.2	0.45	0.57	0.66	3.38
1.5	2	112M	20.5	4.2	2.2	2.2	0.0178	26	57	33.4	46	700	73.7	75.4	73.5	0.48	0.61	0.70	4.21
2.2	3	132S	29.6	6.1	2.5	2.8	0.0602	22	48	55.3	48	710	75.8	78.0	77.1	0.55	0.68	0.77	5.35
3	4	132M	40.4	6.1	2.2	2.6	0.0728	18	40	65.0	48	710	78.5	80.1	79.0	0.55	0.68	0.76	7.21
4	5.5	160M	53.1	4.7	2.0	2.1	0.1006	17	37	101	51	720	79.5	82.0	81.5	0.52	0.65	0.72	9.84
5.5	7.5	160M	73.0	4.7	2.0	2.1	0.1221	16	35	110	51	720	82.0	83.2	83.0	0.52	0.65	0.73	13.1
7.5	10	160L	99.5	4.9	2.2	2.2	0.1508	16	35	130	51	720	84.0	85.5	85.0	0.52	0.65	0.73	17.4
9.2	12.5	180M	121	6.3	2.0	2.4	0.2308	10	22	156	51	725	86.0	86.5	86.0	0.64	0.76	0.82	18.8
11	15	180L	145	6.4	2.1	2.4	0.2715	10	22	175	51	725	87.0	87.5	87.0	0.67	0.78	0.84	21.7
15	20	200L	198	4.6	1.9	2.0	0.3692	22	48	205	53	725	87.5	88.0	88.0	0.58	0.70	0.76	32.4
18.5	25	225S/M	241	6.4	1.8	2.4	0.8328	18	40	339	56	735	91.0	91.0	90.6	0.66	0.77	0.82	35.9
22	30	225S/M	286	6.4	1.8	2.4	0.9716	16	35	358	56	735	91.3	91.3	91.0	0.69	0.79	0.83	42.0
30	40	250S/M	390	6.9	1.9	2.7	1.16	13	29	433	56	735	91.6	91.8	91.6	0.67	0.78	0.83	57.0
37	50	280S/M	478	5.0	1.6	2.0	2.07	26	57	575	59	740	91.8	92.4	92.3	0.64	0.75	0.79	73.2
45	60	280S/M	581	5.4	1.7	2.0	2.53	21	46	617	59	740	92.1	92.6	92.5	0.64	0.75	0.79	88.9
55	75	315S/M	710	5.3	1.6	2.0	3.05	30	66	745	62	740	92.6	93.0	93.0	0.65	0.76	0.80	107
75	100	315S/M	968	5.3	1.6	2.0	4.37	30	66	913	62	740	93.0	93.5	93.5	0.66	0.76	0.80	145
90	125	315S/M	1160	5.8	1.8	2.1	5.29	26	57	982	62	740	93.6	94.0	94.2	0.66	0.76	0.80	172
110	150	315L	1420	5.8	1.8	2.1	12.2	24	53	1180	68	740	93.8	94.5	94.5	0.64	0.75	0.80	210
132	175	315L	1700	6.2	2.0	2.2	12.8	23	51	1290	68	740	94.0	94.5	94.6	0.63	0.74	0.79	255
150	200	355M/L	1920	7.0	1.5	2.0	15.9	35	77	1571	70	745	94.8	95.0	95.0	0.64	0.75	0.80	308
160	220	355M/L	2050	6.2	1.4	2.2	15.9	48	106	1571	70	745	94.5	95.0	95.0	0.62	0.74	0.79	308
185	250	355M/L	2370	6.0	1.4	2.1	16.7	46	101	1653	70	745	94.6	95.1	95.1	0.64	0.75	0.80	351
200	270	355M/L	2570	6.2	1.5	2.2	18.9	44	97	1725	70	745	94.8	95.2	95.2	0.63	0.74	0.79	384
220	300	355M/L	2820	6.3	1.4	2.1	19.8	42	92	1839	70	745	95.0	95.3	95.3	0.64	0.75	0.80	417
Optional Frames																			
2.2	3	132M	29.6	6.1	2.5	2.8	0.0602	22	48	55.3	48	710	75.8	78.0	77.1	0.55	0.68	0.77	5.35
5.5	7.5	160L	73.0	4.7	2.0	2.1	0.1221	16	35	110	51	720	82.0	83.2	83.0	0.52	0.65	0.73	13.1
7.5	10	160M	99.5	4.9	2.2	2.2	0.1508	16	35	130	51	720	84.0	85.5	85.0	0.52	0.65	0.73	17.4
37	50	250S/M	484	6.9	1.9	2.7	1.48	12	26	475	56	730	91.9	92.0	91.9	0.67	0.78	0.83	70.0
55	75	280S/M	710	5.4	1.7	2.0	3.05	20	44	826	59	740	92.4	92.7	93.0	0.64	0.75	0.79	108
110	150	315S/M	1420	7.0	1.9	2.2	7.32	50	110	1270	62	740	92.5	94.1	94.6	0.61	0.73	0.79	212
110	150	355M/L	1410	5.6	1.1	2.0	12.2	50	110	1343	70	745	94.0	94.5	94.6	0.62	0.73	0.79	212
132	175	355M/L	1690	6.0	1.2	2.1	12.8	48	106	1448	70	745	94.3	94.9	94.8	0.62	0.74	0.79	254
160	220	315L	2070	6.4	2.2	2.2	10.0	20	44	1350	68	740	94.5	94.8	94.8	0.63	0.74	0.79	308
185	250	315L**	2390	7.0	2.4	2.4	11.2	12	26	1520	68	740	94.5	94.9	94.9	0.62	0.72	0.78	361

Notes:
(1) Efficiency values are given according to IEC 60034-2-1. They are calculated according to indirect method, with stray load losses determined by measurement.
(**) Class "F" insulation ΔT 105 K.

W22 - Standard Efficiency

Output		380 V								415 V							
		Rated speed	% of full load						Full load current	Rated speed	% of full load						Full load current
			Efficiency			Power Factor					Efficiency			Power Factor			
kW	HP	(rpm)	50	75	100	50	75	100	In (A)	(rpm)	50	75	100	50	75	100	In (A)
VIII pole - 750 rpm - 50 Hz																	
0.12	0.16	650	41.0	47.1	47.6	0.39	0.48	0.57	0.672	670	32.7	40.3	43.2	0.36	0.43	0.50	0.773
0.18	0.25	690	40.7	47.7	50.6	0.47	0.57	0.66	0.819	700	32.8	41.2	46.1	0.43	0.51	0.59	0.921
0.25	0.33	675	48.8	52.8	53.4	0.48	0.60	0.70	1.02	690	43.2	49.4	52.1	0.43	0.53	0.63	1.06
0.37	0.5	680	54.4	59.0	58.3	0.48	0.60	0.69	1.40	690	46.6	53.8	56.1	0.41	0.51	0.61	1.50
0.55	0.75	665	61.7	62.0	60.0	0.47	0.60	0.70	1.99	680	54.8	59.0	59.0	0.41	0.52	0.62	2.09
0.75	1	695	65.6	69.0	68.0	0.46	0.58	0.66	2.54	710	58.3	64.6	66.7	0.39	0.49	0.58	2.70
1.1	1.5	690	72.1	73.6	70.8	0.50	0.62	0.70	3.37	705	66.2	70.7	70.7	0.41	0.53	0.62	3.49
1.5	2	690	75.9	76.2	73.2	0.52	0.65	0.73	4.27	705	71.6	74.2	73.1	0.44	0.57	0.66	4.33
2.2	3	705	77.1	78.3	76.7	0.60	0.73	0.80	5.45	715	74.7	77.5	77.1	0.52	0.65	0.74	5.36
3	4	705	79.7	80.5	78.6	0.60	0.73	0.80	7.25	715	77.1	79.6	79.0	0.51	0.64	0.73	7.24
4	5.5	715	81.3	82.7	81.2	0.57	0.70	0.75	9.98	720	77.8	81.2	81.3	0.48	0.61	0.69	9.92
5.5	7.5	715	83.3	83.5	82.5	0.57	0.69	0.76	13.3	720	80.7	82.6	83.0	0.49	0.62	0.70	13.2
7.5	10	715	85.2	85.8	84.6	0.57	0.69	0.76	17.7	720	82.8	85.0	85.0	0.48	0.62	0.70	17.5
9.2	12.5	720	86.8	86.6	85.4	0.69	0.80	0.84	19.5	730	85.2	86.3	86.2	0.60	0.73	0.80	18.6
11	15	720	87.6	87.4	86.3	0.72	0.81	0.86	22.5	725	86.4	87.3	87.3	0.63	0.75	0.82	21.4
15	20	720	88.5	88.2	87.5	0.64	0.74	0.78	33.4	725	86.4	87.6	88.0	0.53	0.66	0.73	32.5
18.5	25	730	91.3	90.8	90.0	0.70	0.80	0.84	37.2	735	90.6	91.0	90.8	0.63	0.75	0.81	35.0
22	30	730	91.5	91.1	90.3	0.73	0.82	0.84	44.1	735	91.0	91.3	91.2	0.66	0.77	0.82	40.9
30	40	730	92.0	91.7	91.1	0.72	0.81	0.85	58.9	735	91.2	91.7	91.8	0.63	0.75	0.81	56.1
37	50	735	92.2	92.3	91.8	0.69	0.78	0.81	75.6	740	91.4	92.3	92.5	0.60	0.72	0.77	72.3
45	60	735	92.5	92.6	92.1	0.69	0.78	0.81	91.6	740	91.7	92.5	92.6	0.60	0.72	0.77	87.8
55	75	740	93.0	93.1	92.8	0.69	0.79	0.81	111	740	92.2	92.9	93.2	0.61	0.73	0.78	105
75	100	735	93.2	93.3	93.0	0.70	0.79	0.81	151	740	92.7	93.4	93.6	0.63	0.74	0.79	141
90	125	740	93.8	94.0	94.0	0.70	0.79	0.81	180	740	93.1	93.8	94.3	0.62	0.73	0.78	170
110	150	740	93.4	94.4	94.6	0.69	0.78	0.82	215	740	93.4	94.4	94.6	0.60	0.72	0.78	207
132	175	740	94.3	94.5	94.4	0.68	0.77	0.81	262	740	93.6	94.4	94.6	0.59	0.71	0.77	252
150	200	745	95.3	95.3	95.1	0.69	0.79	0.83	289	745	94.2	94.7	94.9	0.59	0.71	0.77	286
160	220	745	94.9	95.2	95.0	0.67	0.78	0.81	316	745	94.1	94.8	95.0	0.58	0.71	0.77	304
185	250	745	94.9	95.2	95.0	0.69	0.78	0.82	361	745	94.3	95.0	95.1	0.60	0.72	0.78	347
200	270	745	95.2	95.3	95.1	0.68	0.78	0.81	394	745	94.4	95.0	95.2	0.59	0.71	0.77	380
220	300	745	95.3	95.4	95.2	0.69	0.78	0.82	428	745	94.7	95.2	95.3	0.60	0.72	0.78	412

Optional Frames																	
2.2	3	705	77.1	78.3	76.7	0.60	0.73	0.80	5.45	715	74.7	77.5	77.1	0.52	0.65	0.74	5.36
5.5	7.5	715	83.3	83.5	82.5	0.57	0.69	0.76	13.3	720	80.7	82.6	83.0	0.49	0.62	0.70	13.2
7.5	10	715	85.2	85.8	84.6	0.57	0.69	0.76	17.7	720	82.8	85.0	85.0	0.48	0.62	0.70	17.5
37	50	725	92.1	91.8	91.3	0.71	0.81	0.85	72.4	730	91.6	92.0	92.2	0.63	0.75	0.81	68.9
55	75	735	92.7	92.6	92.5	0.68	0.78	0.80	113	740	92.0	92.6	93.1	0.60	0.72	0.77	107
110	150	740	93.2	94.4	94.7	0.67	0.77	0.82	215	740	91.9	93.8	94.4	0.56	0.69	0.76	213
110	150	740	93.0	94.2	94.5	0.66	0.77	0.82	216	745	92.0	94.1	94.5	0.60	0.71	0.78	208
132	175	740	93.5	94.6	94.8	0.66	0.75	0.81	261	745	92.5	94.4	94.8	0.60	0.71	0.77	252
160	220	740	94.5	94.8	94.8	0.66	0.76	0.80	321	740	94.8	95.0	95.0	0.60	0.72	0.78	300
185	250	740	94.7	94.9	94.9	0.65	0.75	0.80	370	740	94.7	95.0	95.0	0.57	0.69	0.76	356

W22 - High Efficiency
Exceeds IE2 (1) - EFF1 (2)

Output		Frame	Full load torque (Nm)	Locked rotor current Il/In	Locked rotor torque Tl/Tn	Break-down torque Tb/Tn	Inertia J (kgm²)	Allowable locked rotor time (s)		Weight (kg)	Sound dB (A)	400 V							
												Rated speed (rpm)	% of full load						Full load current In (A)
													Efficiency			Power factor			
kW	HP							Hot	Cold				50	75	100	50	75	100	
II Pole - 3000 rpm - 50 Hz																			
0.12	0.16	63	0.410	4.8	3.0	2.9	0.00012	37	81	5.7	52	2790	53.0	60.0	61.0	0.53	0.66	0.75	0.379
0.18	0.25	63	0.620	4.6	2.9	2.8	0.00014	28	62	6.2	52	2770	56.0	62.0	63.0	0.54	0.68	0.78	0.529
0.25	0.33	63	0.870	4.7	3.2	2.9	0.00016	24	53	6.7	52	2760	58.0	64.0	65.0	0.53	0.67	0.78	0.712
0.37	0.5	71	1.26	5.6	2.7	2.8	0.00033	21	46	6.5	56	2800	68.0	71.0	71.0	0.66	0.79	0.86	0.875
0.55	0.75	71	1.89	5.3	2.7	2.7	0.00040	15	33	8.5	56	2780	70.0	72.0	72.0	0.70	0.82	0.88	1.25
0.75	1	80	2.57	6.0	3.1	3.1	0.00065	22	48	12.5	59	2790	77.0	78.0	78.0	0.67	0.79	0.85	1.63
1.1	1.5	80	3.77	6.3	3.2	3.1	0.00082	18	40	14.0	59	2790	79.5	80.5	80.5	0.67	0.79	0.85	2.32
1.5	2	90S	5.07	5.9	2.6	2.6	0.0016	12	26	17.5	62	2825	81.5	82.0	82.0	0.66	0.78	0.84	3.14
2.2	3	90L	7.40	6.6	3.0	3.0	0.0022	9	20	21.0	62	2840	83.0	83.6	83.6	0.63	0.76	0.83	4.58
3	4	100L	9.95	7.7	2.9	3.1	0.0051	12	26	28.5	67	2880	84.0	85.0	85.0	0.68	0.80	0.86	5.92
4	5.5	112M	13.3	6.5	2.3	2.9	0.0066	16	35	38.0	64	2870	86.0	86.0	86.0	0.70	0.81	0.87	7.72
5.5	7.5	132S	18.1	6.8	2.2	3.0	0.0162	17	37	60.0	67	2910	86.5	88.0	88.0	0.68	0.79	0.85	10.6
7.5	10	132S	24.6	6.8	2.2	2.9	0.0198	13	29	63.0	67	2910	88.0	88.5	88.5	0.72	0.82	0.87	14.1
9.2	12.5	132M	30.2	7.6	2.5	3.2	0.0234	10	22	70.0	67	2915	88.5	89.0	89.0	0.70	0.81	0.86	17.3
11	15	160M	35.8	7.0	2.3	3.0	0.0530	13	29	104	67	2935	90.0	90.6	90.5	0.71	0.82	0.86	20.4
15	20	160M	48.9	7.0	2.3	3.0	0.0588	9	20	112	67	2930	91.0	91.3	91.3	0.71	0.81	0.86	27.6
18.5	25	160L	60.1	7.4	2.4	3.1	0.0677	8	18	124	67	2940	91.3	92.0	92.0	0.70	0.80	0.86	33.7
22	30	180M	71.4	7.3	2.2	3.0	0.1192	9	20	164	67	2945	92.0	92.4	92.2	0.76	0.84	0.88	39.1
30	40	200L	97.0	6.5	2.4	2.7	0.2063	17	37	226	72	2955	92.5	93.0	92.9	0.75	0.83	0.87	53.6
37	50	200L	120	6.8	2.4	2.6	0.2242	16	35	255	72	2950	93.0	93.4	93.3	0.76	0.84	0.87	65.8
45	60	225S/M	145	7.0	2.2	2.8	0.4485	12	26	356	75	2960	93.3	93.6	93.6	0.79	0.86	0.89	78.0
55	75	250S/M	178	7.0	2.2	2.8	0.5023	14	31	413	75	2960	93.6	93.9	93.9	0.79	0.86	0.89	95.0
75	100	280S/M	241	7.0	2.0	2.8	1.27	28	62	630	77	2975	93.4	94.3	94.3	0.79	0.86	0.89	129
90	125	280S/M	289	7.0	2.0	2.8	1.41	25	55	653	77	2975	94.0	94.6	94.6	0.79	0.86	0.89	154
110	150	315S/M	353	7.3	2.0	2.9	1.51	24	53	874	77	2980	94.3	94.9	94.9	0.79	0.86	0.89	188
132	175	315S/M	423	7.3	2.0	2.9	1.74	21	46	931	77	2980	94.5	95.1	95.1	0.80	0.87	0.90	223
160	220	315S/M	513	7.5	2.2	2.9	2.12	23	51	995	77	2980	94.8	95.3	95.3	0.80	0.87	0.90	269
185	250	315S/M	593	7.6	2.2	3.1	2.12	16	35	1032	77	2980	94.9	95.5	95.4	0.80	0.86	0.89	314
200	270	315L	641	7.5	2.3	2.8	2.17	21	46	1175	78	2980	95.0	95.5	95.4	0.82	0.88	0.90	336
220	300	315L	705	7.8	2.4	2.8	5.17	14	31	1228	78	2980	95.0	95.5	95.5	0.81	0.87	0.90	369
250	340	315L	802	7.8	2.4	2.8	5.75	17	37	1316	78	2980	95.1	95.6	95.5	0.84	0.89	0.91	415
280	380	315L	898	7.9	2.3	2.8	5.75	12	26	1392	78	2980	95.2	95.6	95.6	0.85	0.89	0.91	465
315*	430	355M/L	1010	7.8	2.1	2.6	4.01	23	51	1777	80	2985	95.2	95.6	95.6	0.87	0.91	0.92	517
355*	480	355M/L	1140	7.9	2.2	2.8	4.01	14	31	1838	80	2985	95.3	95.6	95.6	0.87	0.90	0.91	589
400*	550	355A/B	1280	7.6	2.4	2.8	6.76	31	68	2043	83	2985	95.8	96.2	96.4	0.85	0.89	0.91	658
450*	610	355A/B	1440	7.5	2.5	2.7	7.40	31	68	2160	83	2985	95.8	96.2	96.6	0.85	0.90	0.91	739
Optional Frames																			
0.37	0.5	63	1.29	4.5	3.1	2.8	0.00020	20	44	7.2	52	2730	64.0	67.0	68.0	0.57	0.72	0.82	0.958
0.75	1	90S	2.51	6.5	2.7	2.8	0.00117	25	55	15.5	62	2850	77.0	79.0	79.0	0.61	0.73	0.80	1.71
1.1	1.5	90S	3.71	6.1	2.5	2.6	0.0014	16	35	16.5	62	2835	80.0	80.5	80.5	0.65	0.77	0.83	2.38
1.5	2	90L	5.07	5.9	2.6	2.6	0.0016	12	26	17.5	62	2825	81.5	82.0	82.0	0.66	0.78	0.84	3.14
2.2	3	100L	7.29	7.5	2.6	3.0	0.0043	15	33	26.5	67	2885	82.5	83.6	83.6	0.66	0.78	0.85	4.47
5.5	7.5	112M	18.3	7.3	2.7	3.0	0.0088	11	24	42.0	64	2880	86.5	87.0	87.0	0.72	0.82	0.87	10.5
5.5	7.5	132M	18.1	6.8	2.2	3.0	0.0162	17	37	60.0	67	2910	86.5	88.0	88.0	0.68	0.79	0.85	10.6
7.5	10	132M	24.6	6.8	2.2	2.9	0.0198	13	29	63.0	67	2910	88.0	88.5	88.5	0.72	0.82	0.87	14.1
11	15	160L	35.8	7.0	2.3	3.0	0.0530	13	29	104	67	2935	90.0	90.6	90.5	0.71	0.82	0.86	20.4
15	20	160L	48.9	7.0	2.3	3.0	0.0588	9	20	112	67	2930	91.0	91.3	91.3	0.71	0.81	0.86	27.6
18.5	25	180M	60.1	7.0	2.1	2.9	0.1135	10	22	156	67	2940	91.4	92.0	91.8	0.75	0.84	0.88	33.1
22	30	180L	71.4	7.3	2.2	3.0	0.1192	9	20	164	67	2945	92.0	92.4	92.2	0.76	0.84	0.88	39.1
75	100	250S/M	242	8.2	2.4	3.0	0.5561	10	22	450	75	2965	94.0	94.3	94.3	0.79	0.86	0.90	128
110	150	280S/M	353	7.6	2.3	3.0	1.51	21	46	702	77	2975	94.5	94.9	94.9	0.78	0.86	0.89	188
200	270	315S/M	641	7.5	2.3	2.8	2.17	21	46	1175	77	2980	95.0	95.5	95.4	0.82	0.88	0.90	336
200	270	355M/L	640	7.6	1.9	2.7	4.83	22	48	1487	80	2985	94.8	95.5	95.5	0.83	0.88	0.90	336
220	300	355M/L	704	7.6	1.8	2.5	5.17	21	46	1560	80	2985	95.1	95.6	95.5	0.86	0.89	0.90	369
250	340	355M/L	800	7.9	2.2	2.8	5.75	20	44	1634	80	2985	95.2	95.6	95.6	0.86	0.89	0.91	415
280	380	355M/L	898	7.7	1.9	2.6	5.75	17	37	1669	80	2980	95.2	95.6	95.6	0.86	0.89	0.91	465
315	430	315L**	1010	7.9	2.3	2.7	4.01	11	24	1442	86	2980	95.2	95.6	95.6	0.84	0.88	0.90	528

Notes:
(1) Efficiency values are given according to IEC 60034-2-1. They are calculated according to indirect method, with stray load losses determined by measurement.
(2) The CEMEP reference shown means that the efficiency will meet EFF1 if tested according to IEC 60034-2.
(*) Fitted with air deflector in the drive end side.
(**) Class "F" insulation ΔT 105 K.

W22 - High Efficiency
Exceeds IE2 (1) - EFF1 (2)

Output		380 V								415 V							
		Rated speed	% of full load						Full load current	Rated speed	% of full load						Full load current
			Efficiency			Power Factor					Efficiency			Power Factor			
kW	HP	(rpm)	50	75	100	50	75	100	In (A)	(rpm)	50	75	100	50	75	100	In (A)
II Pole - 3000 rpm - 50 Hz																	
0.12	0.16	2765	54.7	60.8	60.9	0.57	0.71	0.79	0.379	2805	51.4	59.0	60.6	0.50	0.63	0.72	0.383
0.18	0.25	2740	57.9	63.0	63.0	0.58	0.73	0.82	0.529	2785	54.1	60.9	62.6	0.50	0.64	0.75	0.533
0.25	0.33	2730	60.3	65.1	65.0	0.59	0.73	0.82	0.713	2775	55.9	62.7	64.5	0.49	0.63	0.74	0.729
0.37	0.5	2775	69.0	71.1	70.3	0.72	0.83	0.89	0.898	2815	66.9	70.6	71.2	0.63	0.76	0.84	0.861
0.55	0.75	2750	70.8	71.9	71.0	0.75	0.85	0.91	1.29	2795	68.9	71.7	72.5	0.65	0.79	0.86	1.23
0.75	1	2765	77.7	78.0	77.2	0.72	0.83	0.87	1.70	2805	76.0	77.8	78.4	0.63	0.76	0.82	1.62
1.1	1.5	2765	80.4	80.5	79.7	0.73	0.83	0.87	2.41	2805	78.6	80.2	80.7	0.62	0.75	0.82	2.31
1.5	2	2800	82.0	81.6	80.9	0.71	0.81	0.86	3.28	2840	80.8	81.9	82.5	0.61	0.75	0.82	3.08
2.2	3	2820	83.7	83.5	83.2	0.69	0.80	0.85	4.75	2855	82.2	83.4	83.9	0.59	0.72	0.80	4.56
3	4	2865	84.9	85.1	84.5	0.74	0.84	0.88	6.13	2890	83.1	84.6	85.0	0.64	0.77	0.84	5.85
4	5.5	2855	86.6	86.0	85.4	0.75	0.85	0.89	8.00	2880	85.3	85.9	86.3	0.66	0.78	0.85	7.59
5.5	7.5	2900	87.1	88.0	87.6	0.74	0.83	0.88	10.8	2915	85.6	87.6	88.0	0.63	0.76	0.83	10.5
7.5	10	2900	88.4	88.4	88.1	0.77	0.85	0.89	14.5	2915	87.3	88.3	88.7	0.67	0.79	0.85	13.8
9.2	12.5	2905	89.1	89.0	88.6	0.75	0.85	0.89	17.7	2920	87.6	88.6	89.0	0.65	0.77	0.84	17.1
11	15	2930	90.3	90.5	90.1	0.75	0.85	0.88	21.1	2940	89.6	90.5	90.6	0.67	0.79	0.84	20.1
15	20	2945	91.4	91.3	90.9	0.76	0.84	0.88	28.5	2935	90.6	91.2	91.4	0.67	0.78	0.84	27.2
18.5	25	2930	91.6	91.9	91.6	0.74	0.83	0.88	34.9	2945	91.0	91.9	92.2	0.66	0.77	0.84	33.2
22	30	2940	92.2	92.2	91.8	0.79	0.86	0.89	40.9	2950	91.8	92.4	92.4	0.73	0.82	0.87	38.1
30	40	2950	92.7	92.9	92.6	0.79	0.85	0.88	55.9	2960	92.3	93.0	93.0	0.71	0.81	0.86	52.2
37	50	2945	93.2	93.3	93.0	0.80	0.86	0.88	68.7	2955	92.8	93.4	93.5	0.73	0.82	0.86	64.0
45	60	2955	93.4	93.5	93.2	0.83	0.88	0.90	81.5	2960	93.1	93.6	93.8	0.76	0.84	0.88	75.8
55	75	2955	93.8	93.8	93.6	0.83	0.88	0.90	99.2	2960	93.3	93.8	94.0	0.75	0.84	0.88	92.5
75	100	2970	93.6	94.3	94.1	0.82	0.88	0.90	135	2975	93.2	94.2	94.3	0.76	0.84	0.88	126
90	125	2970	94.2	94.6	94.4	0.83	0.88	0.90	161	2975	93.8	94.5	94.5	0.76	0.84	0.88	151
110	150	2975	94.5	94.9	94.8	0.83	0.88	0.90	196	2980	94.1	94.8	94.9	0.76	0.84	0.88	183
132	175	2975	94.6	95.1	94.9	0.83	0.89	0.91	232	2980	94.4	95.1	95.2	0.78	0.86	0.89	217
160	220	2975	94.9	95.2	95.2	0.83	0.89	0.91	281	2980	94.7	95.3	95.3	0.78	0.86	0.89	262
185	250	2975	95.0	95.5	95.3	0.83	0.88	0.90	328	2980	94.8	95.5	95.4	0.78	0.85	0.88	307
200	270	2975	95.0	95.4	95.2	0.85	0.89	0.91	351	2980	94.9	95.5	95.5	0.80	0.87	0.90	324
220	300	2975	95.1	95.4	95.3	0.84	0.88	0.91	385	2980	94.9	95.5	95.6	0.79	0.86	0.89	360
250	340	2980	95.1	95.5	95.3	0.86	0.90	0.91	438	2980	95.0	95.6	95.6	0.82	0.88	0.91	400
280	380	2975	95.2	95.5	95.4	0.87	0.90	0.91	490	2980	95.2	95.6	95.7	0.83	0.88	0.91	447
315*	430	2980	94.2	95.5	95.4	0.89	0.92	0.92	545	2985	95.2	95.6	95.7	0.86	0.90	0.92	498
355*	480	2980	95.3	95.5	95.4	0.89	0.91	0.91	621	2985	95.3	95.6	95.7	0.85	0.89	0.91	567
400*	550	2985	95.9	96.2	96.3	0.87	0.90	0.91	694	2485	95.7	96.2	96.5	0.84	0.88	0.91	634
450*	610	2985	95.9	96.2	96.5	0.87	0.91	0.91	779	2485	95.7	96.2	96.7	0.84	0.89	0.91	711

Optional Frames																	
0.37	0.5	2695	65.9	67.6	67.4	0.63	0.77	0.84	0.993	2750	62.1	66.2	67.9	0.53	0.67	0.78	0.972
0.75	1	2830	77.8	79.1	78.3	0.66	0.77	0.83	1.75	2860	76.0	78.7	79.2	0.56	0.70	0.78	1.69
1.1	1.5	2810	80.7	80.3	79.5	0.70	0.80	0.85	2.47	2850	79.2	80.4	81.0	0.60	0.74	0.81	2.33
1.5	2	2800	82.0	81.6	80.9	0.71	0.81	0.86	3.28	2840	80.8	81.9	82.5	0.61	0.75	0.82	3.08
2.2	3	2870	83.3	83.8	83.2	0.71	0.82	0.87	4.62	2895	81.5	83.2	83.6	0.62	0.75	0.82	4.46
5.5	7.5	2865	87.0	86.9	86.4	0.76	0.86	0.89	10.9	2885	85.9	86.8	87.2	0.67	0.79	0.85	10.3
5.5	7.5	2900	87.1	88.0	87.6	0.74	0.83	0.88	10.8	2915	85.6	87.6	88.0	0.63	0.76	0.83	10.5
7.5	10	2900	88.4	88.4	88.1	0.77	0.85	0.89	14.5	2915	87.3	88.3	88.7	0.67	0.79	0.85	13.8
11	15	2930	90.3	90.5	90.1	0.75	0.85	0.88	21.1	2940	89.6	90.5	90.6	0.67	0.79	0.84	20.1
15	20	2945	91.4	91.3	90.9	0.76	0.84	0.88	28.5	2935	90.6	91.2	91.4	0.67	0.78	0.84	27.2
18.5	25	2935	91.6	91.8	91.4	0.78	0.86	0.89	34.6	2945	91.2	92.0	92.0	0.72	0.82	0.87	32.2
22	30	2940	92.2	92.2	91.8	0.79	0.86	0.89	40.9	2950	91.8	92.4	92.4	0.73	0.82	0.87	38.1
75	100	2960	94.2	94.3	94.1	0.83	0.88	0.92	132	2970	93.8	94.3	94.4	0.75	0.84	0.88	126
110	150	2970	94.7	94.9	94.8	0.82	0.88	0.90	196	2975	94.3	94.8	94.9	0.75	0.84	0.88	183
200	270	2975	95.0	95.4	95.2	0.85	0.89	0.91	351	2980	94.9	95.5	95.5	0.80	0.87	0.90	324
200	270	2980	93.9	95.2	95.5	0.90	0.92	0.92	346	2985	93.5	95.1	95.6	0.88	0.90	0.91	320
220	300	2985	95.5	96.2	96.4	0.87	0.91	0.92	377	2990	95.0	96.0	96.3	0.83	0.89	0.91	349
250	340	2980	95.5	96.3	96.4	0.89	0.92	0.93	424	2985	95.4	96.3	96.4	0.86	0.91	0.92	392
280	380	2975	95.2	95.5	95.4	0.87	0.90	0.91	490	2980	95.2	95.6	95.7	0.83	0.88	0.91	447
315	430	2980	94.2	95.5	95.4	0.89	0.92	0.92	545	2980	95.2	95.6	95.7	0.82	0.87	0.90	510

W22 - High Efficiency
Exceeds IE2 (1) - EFF1 (2)

Output		Frame	Full load torque (Nm)	Locked rotor current Il/In	Locked rotor torque Tl/Tn	Break-down torque Tb/Tn	Inertia J (kgm²)	Allowable locked rotor time (s)		Weight (kg)	Sound dB (A)	400 V							
												Rated speed (rpm)	% of full load						Full load current In (A)
													Efficiency			Power factor			
kW	HP							Hot	Cold				50	75	100	50	75	100	
IV pole - 1500 rpm - 50 Hz																			
0.12	0.16	63	0.830	3.9	1.8	2.0	0.00039	51	112	5.7	44	1380	55.0	58.0	59.0	0.54	0.67	0.77	0.381
0.18	0.25	63	1.25	4.3	2.2	2.2	0.00055	40	88	7.2	44	1380	59.0	61.0	61.0	0.55	0.68	0.77	0.553
0.25	0.33	71	1.76	4.0	2.1	2.2	0.00055	68	150	7.0	43	1360	63.0	66.0	66.0	0.54	0.67	0.76	0.719
0.37	0.5	71	2.59	4.2	2.5	2.5	0.00066	48	106	8.0	43	1365	65.0	68.0	68.0	0.50	0.64	0.73	1.08
0.55	0.75	80	3.73	5.8	2.4	2.8	0.0022	18	40	10.5	44	1410	75.0	76.5	76.5	0.61	0.74	0.82	1.27
0.75	1	80	5.08	6.0	2.6	2.9	0.0029	15	33	13.5	44	1410	79.0	79.6	79.8	0.63	0.76	0.83	1.63
1.1	1.5	90S	7.30	6.5	1.9	2.6	0.0049	14	31	19.0	49	1440	81.0	81.8	81.8	0.62	0.75	0.81	2.40
1.5	2	90L	9.95	6.3	2.0	2.8	0.0055	10	22	22.0	49	1440	81.5	83.0	83.0	0.57	0.72	0.80	3.26
2.2	3	100L	14.8	6.6	3.1	3.2	0.0082	16	35	30.5	53	1425	84.0	84.5	84.5	0.63	0.75	0.81	4.64
3	4	100L	20.2	6.5	3.2	3.3	0.0097	14	31	33.0	53	1420	85.0	85.6	85.6	0.64	0.76	0.82	6.17
4	5.5	112M	26.5	6.1	2.0	2.6	0.0156	13	29	42.0	56	1440	86.0	86.7	86.7	0.64	0.76	0.82	8.11
5.5	7.5	132S	36.0	7.3	1.9	3.0	0.0416	10	22	63.0	56	1460	88.0	88.1	88.1	0.69	0.81	0.86	10.5
7.5	10	132M	49.3	7.2	2.0	3.0	0.0528	8	18	72.0	56	1455	88.7	89.0	89.0	0.71	0.81	0.86	14.1
9.2	12.5	132M	60.4	7.7	2.2	3.2	0.0604	7	15	75.0	56	1455	89.2	89.5	89.5	0.70	0.81	0.86	17.3
9.2	12.5	160M	60.0	6.0	2.0	2.6	0.0803	13	29	96.0	61	1465	88.5	89.5	89.2	0.66	0.77	0.83	17.9
11	15	160M	71.5	6.4	2.3	2.8	0.1004	10	22	105	61	1470	89.0	90.2	90.2	0.65	0.76	0.83	21.2
15	20	160L	97.8	6.2	2.3	2.8	0.1154	10	22	125	61	1465	90.6	91.0	91.0	0.66	0.76	0.83	28.7
18.5	25	180M	121	6.6	2.4	2.8	0.1973	14	31	164	61	1465	91.5	91.8	91.6	0.68	0.78	0.83	35.1
22	30	180L	143	6.8	2.6	2.9	0.2332	15	33	186	61	1465	92.2	92.5	92.3	0.70	0.80	0.85	40.5
30	40	200L	195	6.3	2.2	2.6	0.3310	16	35	222	65	1470	92.6	93.0	92.8	0.68	0.78	0.83	56.2
37	50	225S/M	240	6.6	2.2	2.7	0.6999	12	26	342	66	1475	93.0	93.2	93.2	0.74	0.83	0.86	66.6
45	60	225S/M	292	6.8	2.4	2.7	0.8398	10	22	363	66	1475	93.2	93.7	93.6	0.74	0.83	0.86	80.7
55	75	250S/M	356	6.4	2.2	2.7	1.15	14	31	444	66	1475	93.6	93.9	94.0	0.75	0.84	0.87	97.1
75	100	280S/M	483	7.2	2.0	2.7	2.17	22	48	639	69	1485	93.8	94.4	94.4	0.74	0.83	0.86	133
90	125	280S/M	579	7.2	2.1	2.7	2.81	20	44	673	69	1485	94.1	94.7	94.7	0.76	0.84	0.87	158
110	150	315S/M	705	6.6	2.0	2.4	3.21	26	57	887	71	1490	94.3	95.0	95.0	0.74	0.83	0.86	194
132	175	315S/M	846	6.6	2.1	2.4	3.77	22	48	953	71	1490	94.6	95.2	95.2	0.76	0.84	0.87	230
150	200	315S/M	962	6.2	2.2	2.4	3.77	30	66	950	71	1490	95.0	95.4	95.4	0.77	0.84	0.87	261
160	220	315S/M	1030	6.6	2.2	2.4	3.77	20	44	1012	71	1490	94.8	95.4	95.4	0.77	0.84	0.87	278
185	250	315S/M	1190	6.8	2.4	2.4	3.77	18	40	1114	71	1490	94.9	95.6	95.6	0.75	0.83	0.86	325
200	270	315L	1280	6.7	2.4	2.4	3.93	17	37	1216	74	1490	95.0	95.6	95.6	0.77	0.84	0.87	347
220	300	315L	1410	7.0	2.6	2.4	6.86	14	31	1333	74	1490	95.2	95.7	95.7	0.76	0.84	0.87	381
250	340	315L	1600	7.0	2.6	2.4	8.12	13	29	1399	74	1490	95.3	95.7	95.7	0.77	0.85	0.88	428
280	380	315L	1800	7.2	2.6	2.4	9.02	12	26	1496	74	1490	95.4	95.8	95.8	0.76	0.84	0.87	485
300	400	355M/L	1920	7.2	2.2	2.4	9.92	18	40	1510	76	1490	95.5	95.8	95.8	0.74	0.82	0.85	532
315	430	355M/L	2020	7.2	2.4	2.4	9.92	14	31	1643	76	1490	95.5	95.8	95.8	0.74	0.82	0.86	552
330	450	355M/L	2120	6.8	2.2	2.4	10.7	17	37	1769	76	1490	95.5	95.8	95.8	0.75	0.83	0.86	578
355*	480	355M/L	2280	6.9	2.4	2.3	10.8	15	33	1752	76	1490	95.5	95.9	95.8	0.75	0.83	0.86	622
370*	500	355M/L	2370	7.0	2.4	2.4	10.8	15	33	1971	76	1490	95.5	95.9	95.8	0.75	0.83	0.86	648
400*	550	355M/L	2570	7.3	2.6	2.4	10.8	11	24	1888	76	1490	95.5	95.9	95.8	0.74	0.82	0.86	701
450*	610	355A/B	2890	7.4	2.5	2.8	13.2	20	44	2089	76	1490	95.8	96.1	96.2	0.69	0.80	0.84	804
500*	680	355A/B**	3210	7.3	2.4	2.7	14.6	17	37	2246	76	1490	95.9	96.3	96.3	0.72	0.81	0.85	882

Notes:
(1) Efficiency values are given according to IEC 60034-2-1. They are calculated according to indirect method, with stray load losses determined by measurement.
(2) The CEMEP reference shown means that the efficiency will meet EFF1 if tested according to IEC 60034-2.
(*) Fitted with air deflector in the drive end side.
(**) Class "F" insulation ΔT 105 K.

W22 - High Efficiency
Exceeds IE2 (1) - EFF1 (2)

Output		380 V								415 V							
		Rated speed	% of full load						Full load current	Rated speed	% of full load						Full load current
			Efficiency			Power Factor					Efficiency			Power Factor			
kW	HP	(rpm)	50	75	100	50	75	100	In (A)	(rpm)	50	75	100	50	75	100	In (A)
IV pole - 1500 rpm - 50 Hz																	
0.12	0.16	1360	56.8	58.7	58.4	0.58	0.71	0.80	0.390	1390	53.2	57.1	59.0	0.51	0.64	0.74	0.382
0.18	0.25	1360	60.4	61.3	60.1	0.59	0.72	0.81	0.562	1390	57.7	60.6	61.2	0.52	0.65	0.75	0.546
0.25	0.33	1340	64.1	66.1	65.0	0.58	0.71	0.79	0.740	1370	61.8	65.5	66.5	0.51	0.64	0.74	0.707
0.37	0.5	1345	66.9	68.5	67.4	0.55	0.68	0.77	1.08	1375	63.1	66.9	67.9	0.46	0.60	0.70	1.08
0.55	0.75	1400	76.5	76.7	75.7	0.66	0.78	0.85	1.30	1415	73.6	75.9	76.6	0.57	0.71	0.80	1.25
0.75	1	1400	80.1	79.6	78.9	0.68	0.80	0.86	1.68	1415	77.9	79.2	80.1	0.60	0.73	0.81	1.61
1.1	1.5	1432	81.9	81.8	81.5	0.67	0.78	0.83	2.47	1444	80.1	81.5	82.1	0.58	0.72	0.79	2.36
1.5	2	1430	82.8	83.2	82.4	0.63	0.77	0.83	3.33	1445	80.1	82.3	83.1	0.53	0.68	0.78	3.22
2.2	3	1415	84.5	84.3	83.5	0.68	0.79	0.83	4.82	1430	83.3	84.5	84.9	0.59	0.73	0.79	4.56
3	4	1410	85.6	85.4	84.8	0.68	0.79	0.84	6.40	1425	84.3	85.5	86.0	0.59	0.73	0.80	6.07
4	5.5	1435	86.5	86.6	86.6	0.69	0.80	0.84	8.41	1445	85.3	86.6	87.0	0.60	0.73	0.80	7.99
5.5	7.5	1455	88.6	88.0	87.4	0.74	0.84	0.88	10.9	1460	87.5	88.0	88.3	0.66	0.78	0.84	10.3
7.5	10	1450	89.0	88.7	88.7	0.75	0.83	0.87	14.9	1460	88.3	89.0	89.4	0.67	0.78	0.84	13.9
9.2	12.5	1450	89.6	89.4	88.9	0.75	0.83	0.88	17.9	1455	88.7	89.5	89.8	0.66	0.78	0.85	16.8
9.2	12.5	1460	89.0	89.5	88.7	0.70	0.80	0.85	18.5	1470	88.0	89.4	89.4	0.62	0.74	0.81	17.7
11	15	1465	89.5	90.2	89.8	0.69	0.79	0.85	21.9	1470	88.5	90.0	90.3	0.61	0.73	0.81	20.9
15	20	1460	91.0	90.9	90.6	0.70	0.79	0.85	29.6	1470	90.2	90.9	91.2	0.63	0.73	0.81	28.2
18.5	25	1460	91.8	91.7	91.2	0.72	0.81	0.85	36.3	1470	91.1	91.7	91.7	0.50	0.75	0.81	34.7
22	30	1460	92.5	92.4	91.9	0.74	0.83	0.87	41.8	1465	91.8	92.4	92.4	0.66	0.77	0.83	39.9
30	40	1465	92.9	92.9	92.4	0.72	0.81	0.85	58.0	1470	92.3	92.9	92.9	0.65	0.76	0.81	55.5
37	50	1470	93.2	93.1	92.8	0.78	0.86	0.87	69.6	1475	92.7	93.1	93.3	0.70	0.81	0.85	64.9
45	60	1470	93.5	93.6	93.2	0.78	0.86	0.88	83.4	1475	92.9	93.6	93.7	0.70	0.81	0.84	79.5
55	75	1470	93.8	93.8	93.7	0.79	0.86	0.88	101	1475	93.3	93.9	94.1	0.72	0.82	0.86	94.6
75	100	1480	94.2	94.5	94.2	0.78	0.86	0.87	139	1485	93.5	94.3	94.4	0.71	0.81	0.85	130
90	125	1480	94.4	94.7	94.5	0.80	0.86	0.88	164	1485	93.8	94.6	94.7	0.73	0.82	0.86	154
110	150	1490	94.6	94.9	94.9	0.78	0.86	0.88	200	1490	93.9	94.8	95.0	0.70	0.81	0.84	192
132	175	1485	94.8	95.2	95.0	0.79	0.86	0.88	240	1490	94.4	95.1	95.2	0.73	0.82	0.86	224
150	200	1490	95.2	95.4	95.2	0.80	0.85	0.88	271	1490	94.8	95.4	95.4	0.75	0.83	0.86	254
160	220	1485	95.0	95.4	95.2	0.80	0.86	0.88	290	1490	94.6	95.3	95.4	0.74	0.82	0.86	271
185	250	1485	95.1	95.6	95.5	0.79	0.85	0.87	338	1490	94.7	95.5	95.6	0.72	0.81	0.85	317
200	270	1485	95.1	95.5	95.4	0.80	0.86	0.88	362	1490	94.8	95.6	95.7	0.74	0.82	0.86	338
220	300	1490	95.4	95.7	95.6	0.80	0.86	0.88	397	1490	95.0	95.6	95.7	0.73	0.82	0.86	372
250	340	1490	95.5	95.9	95.8	0.80	0.87	0.89	445	1490	95.1	95.8	95.9	0.74	0.83	0.87	417
280	380	1490	95.6	95.8	95.8	0.79	0.86	0.88	505	1490	95.2	95.7	95.8	0.73	0.82	0.86	473
300	400	1490	95.6	95.6	95.7	0.78	0.84	0.88	541	1490	95.3	95.7	95.8	0.71	0.80	0.84	519
315	430	1490	95.6	95.7	95.7	0.77	0.84	0.87	575	1490	95.3	95.7	95.8	0.71	0.80	0.85	538
330	450	1485	95.5	95.7	95.7	0.74	0.79	0.85	616	1490	95.3	95.7	95.8	0.72	0.81	0.85	564
355*	480	1490	95.6	95.7	95.7	0.78	0.85	0.87	648	1490	95.4	95.8	95.8	0.72	0.81	0.85	607
370*	500	1490	95.1	95.5	95.7	0.78	0.85	0.87	675	1490	95.0	95.7	95.9	0.72	0.81	0.85	631
400*	550	1490	95.7	95.8	95.8	0.77	0.84	0.87	729	1490	95.3	95.8	95.8	0.71	0.80	0.85	683
450*	610	1490	96.0	96.2	96.2	0.73	0.83	0.86	826	1490	95.5	95.9	96.1	0.65	0.77	0.82	794
500*	680	1490	96.1	96.3	96.3	0.76	0.84	0.87	907	1790	95.7	96.2	96.3	0.69	0.79	0.84	860

W22 - High Efficiency
Exceeds IE2 (1) - EFF1 (2)

Output		Frame	Full load torque (Nm)	Locked rotor current Il/In	Locked rotor torque Tl/Tn	Break-down torque Tb/Tn	Inertia J (kgm²)	Allowable locked rotor time (s)		Weight (kg)	Sound dB (A)	400 V							
												Rated speed (rpm)	% of full load						Full load current In (A)
													Efficiency			Power factor			
kW	HP							Hot	Cold				50	75	100	50	75	100	
IV pole - 1500 rpm - 50 Hz																			
Optional frames																			
0.25	0.33	80	1.68	5.5	2.0	2.5	0.0015	31	68	9.0	44	1420	70.0	74.0	74.0	0.61	0.74	0.81	0.602
0.37	0.5	80	2.49	5.7	2.2	2.7	0.0019	23	51	9.5	44	1420	73.0	75.5	75.5	0.60	0.73	0.81	0.873
0.75	1	90S	5.03	5.9	2.2	2.6	0.0038	19	42	17.5	49	1425	78.0	80.0	80.0	0.59	0.72	0.80	1.69
1.1	1.5	90L	7.30	6.5	1.9	2.6	0.0049	14	31	19.0	49	1440	81.0	81.8	81.8	0.62	0.75	0.81	2.40
1.5	2	100L	10.1	6.6	2.8	3.0	0.0067	20	44	28.0	53	1425	82.5	83.2	83.2	0.62	0.74	0.81	3.21
2.2	3	112M	14.6	6.3	1.9	2.6	0.0117	23	51	39.0	56	1445	84.5	85.0	85.0	0.63	0.75	0.81	4.61
4	5.5	132S	26.3	7.2	1.9	3.0	0.0341	14	31	60.0	56	1455	87.0	87.2	87.2	0.68	0.80	0.85	7.75
5.5	7.5	132M	36.0	7.3	1.9	3.0	0.0416	10	22	63.0	56	1460	88.0	88.1	88.1	0.69	0.81	0.86	10.5
7.5	10	132S	49.3	7.2	2.0	3.0	0.0528	8	18	72.0	56	1455	88.7	89.0	89.0	0.71	0.81	0.86	14.1
7.5	10	160M	48.9	6.1	2.1	2.7	0.0652	15	33	93.0	61	1465	88.0	89.2	89.0	0.65	0.77	0.83	14.7
11	15	160L	71.5	6.4	2.3	2.8	0.1004	10	22	105	61	1470	89.0	90.2	90.2	0.65	0.76	0.83	21.2
15	20	180M	97.8	6.6	2.4	2.9	0.1615	14	31	152	61	1465	90.8	91.5	91.3	0.66	0.77	0.83	28.6
18.5	25	180L	121	6.6	2.4	2.8	0.1973	14	31	164	61	1465	91.5	91.8	91.6	0.68	0.78	0.83	35.1
37	50	200L	241	6.0	2.1	2.5	0.3861	14	31	237	65	1470	92.8	93.0	93.0	0.70	0.80	0.83	69.2
75	100	250S/M	486	7.2	2.4	2.9	1.26	10	22	496	66	1475	94.0	94.3	94.4	0.74	0.84	0.88	130
110	150	280S/M	708	7.6	2.4	2.9	3.21	18	40	735	69	1485	94.3	95.0	95.0	0.75	0.83	0.87	192
200	270	315S/M	1280	6.7	2.4	2.4	3.93	17	37	1216	71	1490	95.0	95.6	95.6	0.77	0.84	0.87	347
200	270	355M/L	1280	6.3	1.8	2.0	6.86	18	40	1404	76	1490	95.1	95.6	95.6	0.74	0.81	0.85	355
220	300	355M/L	1410	6.4	2.0	2.2	6.86	18	40	1441	76	1490	95.3	95.7	95.7	0.73	0.81	0.85	390
250	340	355M/L	1600	6.8	2.1	2.4	8.12	18	40	1470	76	1490	95.4	95.8	95.8	0.73	0.82	0.85	443
260	350	355M/L	1670	6.8	2.1	2.4	8.12	18	40	1470	76	1490	95.4	95.8	95.8	0.73	0.82	0.85	461
280	380	355M/L	1800	6.6	2.1	2.4	9.02	14	31	1510	76	1490	95.5	95.8	95.8	0.74	0.82	0.85	496
315	430	315L**	2020	7.6	2.5	2.5	9.92	11	24	1540	78	1490	95.4	95.8	95.8	0.72	0.80	0.85	558

Notes:
(1) Efficiency values are given according to IEC 60034-2-1. They are calculated according to indirect method, with stray load losses determined by measurement.
(2) The CEMEP reference shown means that the efficiency will meet EFF1 if tested according to IEC 60034-2.

W22 - High Efficiency
Exceeds IE2 (1) - EFF1 (2)

Output		380 V								415 V							
		Rated speed	% of full load						Full load current	Rated speed	% of full load						Full load current
			Efficiency			Power Factor					Efficiency			Power Factor			
kW	HP	(rpm)	50	75	100	50	75	100	In (A)	(rpm)	50	75	100	50	75	100	In (A)
IV pole - 1500 rpm - 50 Hz																	
Optional frames																	
0.25	0.33	1410	71.0	74.0	73.2	0.65	0.77	0.84	0.618	1425	69.1	73.7	74.4	0.58	0.71	0.79	0.592
0.37	0.5	1410	74.1	75.6	74.8	0.65	0.77	0.84	0.895	1425	71.7	75.1	75.8	0.57	0.70	0.79	0.860
0.75	1	1415	79.1	79.9	78.9	0.64	0.76	0.83	1.74	1430	76.9	79.6	80.4	0.55	0.69	0.78	1.66
1.1	1.5	1432	81.9	81.8	81.5	0.67	0.78	0.83	2.47	1444	80.1	81.5	82.1	0.58	0.72	0.79	2.36
1.5	2	1415	82.9	82.9	82.2	0.66	0.77	0.83	3.34	1430	81.9	83.2	83.7	0.58	0.71	0.79	3.16
2.2	3	1440	85.0	84.8	84.1	0.67	0.78	0.83	4.79	1450	83.9	84.9	85.4	0.59	0.72	0.79	4.54
4	5.5	1450	87.5	87.1	86.6	0.72	0.83	0.86	8.12	1459	86.4	87.1	87.4	0.65	0.77	0.83	7.63
5.5	7.5	1455	88.6	88.0	87.4	0.74	0.84	0.88	10.9	1460	87.5	88.0	88.3	0.66	0.78	0.84	10.3
7.5	10	1450	89.0	88.7	88.7	0.75	0.83	0.87	14.9	1460	88.3	89.0	89.4	0.67	0.78	0.84	13.9
7.5	10	1460	88.5	89.1	88.6	0.69	0.80	0.85	15.1	1470	87.5	89.0	89.1	0.61	0.74	0.81	14.5
11	15	1465	89.5	90.2	89.8	0.69	0.79	0.85	21.9	1470	88.5	90.0	90.3	0.61	0.73	0.81	20.9
15	20	1460	91.3	91.5	91.0	0.71	0.80	0.85	29.5	1470	90.4	91.4	91.4	0.63	0.74	0.81	28.2
18.5	25	1460	91.8	91.7	91.2	0.72	0.81	0.85	36.3	1470	91.1	91.7	91.7	0.50	0.75	0.81	34.7
37	50	1465	93.1	92.9	92.6	0.74	0.83	0.85	71.4	1472	92.5	93.0	93.2	0.67	0.78	0.81	68.2
75	100	1470	94.3	94.3	94.1	0.78	0.87	0.90	135	1475	93.7	94.2	94.5	0.71	0.82	0.87	127
110	150	1480	94.6	95.1	94.9	0.79	0.85	0.88	200	1485	94.0	94.9	95.0	0.72	0.81	0.86	187
200	270	1485	95.1	95.5	95.4	0.80	0.86	0.88	362	1490	94.8	95.6	95.7	0.74	0.82	0.86	338
200	270	1490	95.3	95.5	95.5	0.78	0.83	0.86	370	1490	94.9	95.5	95.6	0.71	0.79	0.84	346
220	300	1490	95.5	95.6	95.6	0.77	0.83	0.86	407	1490	95.0	95.6	95.7	0.70	0.79	0.84	381
250	340	1490	95.6	95.7	95.7	0.77	0.84	0.86	462	1490	94.2	95.7	95.8	0.70	0.80	0.84	432
260	350	1490	95.6	95.7	95.7	0.77	0.84	0.86	480	1490	94.2	95.7	95.8	0.70	0.80	0.84	449
280	380	1490	95.6	95.7	95.7	0.77	0.84	0.86	517	1490	95.3	95.7	95.8	0.71	0.80	0.84	484
315	430	1490	95.6	95.8	95.8	0.76	0.82	0.86	580	1490	95.2	95.7	95.8	0.69	0.78	0.84	550

W22 - High Efficiency
Exceeds IE2 (1)

Output		Frame	Full load torque (Nm)	Locked rotor current Il/In	Locked rotor torque Tl/Tn	Break-down torque Tb/Tn	Inertia J (kgm²)	Allowable locked rotor time (s)		Weight (kg)	Sound dB (A)	400 V							
												Rated speed (rpm)	% of full load						Full load current In (A)
													Efficiency			Power factor			
kW	HP							Hot	Cold				50	75	100	50	75	100	
VI Pole - 1000 rpm - 50 Hz																			
0.12	0.16	63	1.27	3.0	1.9	2.0	0.00061	52	114	7.2	43	905	42.0	50.0	52.0	0.43	0.53	0.63	0.529
0.18	0.25	71	1.93	3.2	2.0	2.0	0.00082	96	211	9.5	43	890	52.0	58.0	59.0	0.40	0.51	0.61	0.722
0.25	0.33	71	2.65	3.2	2.2	2.1	0.00093	70	154	11.5	43	900	53.0	60.0	61.0	0.37	0.48	0.58	1.02
0.37	0.5	80	3.88	3.9	1.8	2.0	0.0022	27	59	10.5	43	910	63.0	67.0	67.0	0.51	0.66	0.76	1.05
0.55	0.75	80	5.77	4.1	2.0	2.2	0.0030	21	46	14.0	43	910	65.0	71.0	71.0	0.50	0.65	0.75	1.49
0.75	1	90S	7.75	4.5	2.0	2.1	0.0055	23	51	19.0	45	925	74.5	76.0	76.0	0.51	0.64	0.73	1.95
1.1	1.5	90L	11.4	4.7	2.3	2.2	0.0066	17	37	23.0	45	925	76.0	78.1	78.1	0.50	0.63	0.73	2.78
1.5	2	100L	15.3	5.0	2.0	2.4	0.0110	23	51	28.5	44	940	79.5	80.0	80.0	0.51	0.64	0.73	3.71
2.2	3	112M	22.4	5.0	2.1	2.3	0.0183	19	42	38.0	48	940	81.0	82.5	82.0	0.53	0.66	0.73	5.30
3	4	132S	29.9	5.7	2.0	2.4	0.0359	31	68	61.0	52	960	82.5	83.6	83.6	0.50	0.63	0.71	7.30
4	5.5	132M	39.8	6.0	2.1	2.5	0.0453	21	46	68.0	52	960	84.0	84.8	84.8	0.51	0.64	0.72	9.46
5.5	7.5	132M	54.7	6.4	2.2	2.7	0.0604	19	42	72.0	52	960	85.5	86.1	86.1	0.51	0.64	0.72	12.8
7.5	10	160M	73.9	5.8	2.0	2.6	0.1436	17	37	113	56	970	88.3	88.7	88.3	0.64	0.76	0.82	15.0
9.2	12.5	160L	90.6	6.0	2.2	2.6	0.1652	14	31	127	56	970	88.5	88.9	88.6	0.64	0.76	0.82	18.3
11	15	160L	108	6.0	2.3	2.7	0.1760	13	29	136	56	970	89.0	89.5	89.2	0.62	0.74	0.81	22.0
15	20	180L	148	7.0	2.4	3.0	0.2896	7	15	174	56	970	90.3	90.5	90.3	0.70	0.81	0.86	27.9
18.5	25	200L	181	5.7	2.1	2.5	0.3767	15	33	214	60	975	91.0	91.4	91.2	0.67	0.77	0.82	35.7
22	30	200L	216	6.0	2.2	2.7	0.4485	14	31	225	60	975	91.4	91.7	91.5	0.65	0.76	0.82	42.3
30	40	225S/M	291	6.8	2.1	2.5	0.9884	12	26	359	61	985	92.6	92.7	92.6	0.71	0.81	0.86	54.4
37	50	250S/M	359	6.7	2.2	2.5	1.32	16	35	438	61	985	93.0	93.2	93.0	0.73	0.82	0.86	66.8
45	60	280S/M	437	6.2	2.0	2.5	2.30	26	57	596	65	985	93.4	93.6	93.4	0.68	0.78	0.82	84.8
55	75	280S/M	534	6.2	2.0	2.4	2.64	22	48	629	65	985	93.6	93.9	93.8	0.68	0.79	0.83	102
75	100	315S/M	724	6.2	1.9	2.2	3.45	23	51	837	67	990	94.0	94.3	94.2	0.69	0.79	0.83	138
90	125	315S/M	869	6.0	1.9	2.1	4.02	22	48	893	67	990	94.4	94.6	94.5	0.72	0.80	0.84	164
110	150	315S/M	1060	6.1	2.0	2.2	5.29	20	44	966	67	990	94.5	94.9	94.8	0.72	0.80	0.84	199
132	175	315S/M	1270	6.4	2.2	2.4	5.63	17	37	1036	67	990	94.6	95.0	95.0	0.71	0.80	0.84	239
160	220	315L	1540	6.6	2.2	2.4	9.53	14	31	1228	68	990	94.8	95.2	95.2	0.70	0.80	0.84	289
185	250	315L	1790	6.9	2.3	2.4	10.2	12	26	1358	68	990	95.0	95.4	95.4	0.69	0.79	0.83	337
200	270	315L	1930	7.0	2.4	2.5	12.4	12	26	1488	68	990	95.1	95.4	95.4	0.69	0.79	0.83	365
220	300	315L	2120	6.8	2.3	2.3	13.8	14	31	1621	68	990	95.2	95.5	95.5	0.69	0.79	0.83	401
250	340	355M/L	2410	6.0	2.1	2.2	14.8	34	75	1789	73	990	95.3	95.5	95.5	0.66	0.76	0.81	466
260	350	355M/L	2510	6.0	2.1	2.2	14.8	34	75	1789	73	990	95.3	95.5	95.5	0.66	0.76	0.81	485
280	380	355M/L	2700	6.2	2.2	2.2	14.8	27	59	1884	73	990	95.4	95.6	95.6	0.64	0.75	0.80	528
315*	430	355M/L	3020	6.2	2.2	2.2	15.5	28	62	1979	73	995	95.4	95.7	95.6	0.66	0.76	0.81	587
355*	480	355A/B	3430	6.2	2.0	2.3	17.1	29	64	2200	73	990	95.3	95.7	95.8	0.63	0.74	0.79	677
400*	550	355A/B	3860	6.1	2.0	2.3	18.9	29	64	2346	73	990	95.4	95.8	95.9	0.63	0.74	0.79	762
Optional Frames																			
1.5	2	112M	15.2	5.2	2.1	2.3	0.0156	28	62	36.5	48	945	80.5	81.0	80.5	0.51	0.64	0.72	3.74
3	4	132M	29.9	5.7	2.0	2.4	0.0359	31	68	61.0	52	960	82.5	83.6	83.6	0.50	0.63	0.71	7.30
5.5	7.5	160M	54.2	6.0	2.1	2.6	0.1436	19	42	106	56	970	87.5	88.0	87.5	0.63	0.75	0.81	11.2
37	50	225S/M	359	6.8	2.1	2.5	1.32	11	24	390	61	985	93.0	93.2	93.0	0.72	0.81	0.86	66.8
45	60	250S/M	437	6.4	2.1	2.3	1.55	15	33	466	61	985	93.4	93.5	93.4	0.76	0.84	0.87	79.9
75	100	280S/M	724	6.4	2.0	2.4	3.45	17	37	702	65	990	93.9	94.3	94.2	0.69	0.79	0.84	137
160	220	355M/L	1540	5.9	1.8	2.0	9.53	34	75	1453	73	990	94.9	95.3	95.3	0.65	0.75	0.80	303
185	250	355M/L	1790	5.7	1.9	2.0	10.2	32	70	1521	73	990	95.1	95.4	95.4	0.65	0.75	0.80	350
200	270	355M/L	1930	6.5	2.1	2.3	12.4	28	62	1643	73	990	95.1	95.5	95.5	0.64	0.75	0.80	378
220	300	355M/L	2120	6.0	2.0	2.1	13.8	32	70	1795	73	990	95.3	95.5	95.5	0.65	0.75	0.80	416

Notes:
(1) Efficiency values are given according to IEC 60034-2-1. They are calculated according to indirect method, with stray load losses determined by measurement.
(*) Fitted with air deflector in the drive end side.

W22 - High Efficiency
Exceeds IE2 (1)

Output		380 V								415 V							
		Rated speed	% of full load						Full load current	Rated speed	% of full load						Full load current
			Efficiency			Power Factor					Efficiency			Power Factor			
kW	HP	(rpm)	50	75	100	50	75	100	In (A)	(rpm)	50	75	100	50	75	100	In (A)
VI Pole - 1000 rpm - 50 Hz																	
0.12	0.16	895	45.4	52.1	52.9	0.46	0.57	0.67	0.514	910	39.1	47.5	50.7	0.41	0.50	0.59	0.558
0.18	0.25	875	54.2	59.0	58.7	0.43	0.55	0.65	0.717	900	50.1	56.8	58.6	0.38	0.48	0.58	0.737
0.25	0.33	885	56.3	61.9	61.5	0.41	0.52	0.62	0.996	905	50.1	57.8	59.7	0.35	0.45	0.54	1.08
0.37	0.5	895	65.2	67.7	66.0	0.56	0.70	0.80	1.06	915	60.5	65.9	67.1	0.48	0.62	0.73	1.05
0.55	0.75	900	67.5	71.8	70.2	0.55	0.69	0.79	1.51	915	62.5	69.6	70.9	0.47	0.61	0.72	1.50
0.75	1	915	75.8	75.9	74.6	0.55	0.68	0.76	2.01	930	73.2	75.6	76.4	0.48	0.61	0.71	1.92
1.1	1.5	915	77.9	78.5	77.1	0.55	0.67	0.77	2.82	930	74.3	77.3	78.1	0.46	0.59	0.70	2.80
1.5	2	930	80.7	80.1	79.0	0.55	0.69	0.76	3.80	945	78.3	79.7	80.3	0.48	0.61	0.70	3.71
2.2	3	930	82.0	82.4	80.9	0.57	0.70	0.76	5.44	945	80.0	82.1	82.4	0.49	0.63	0.71	5.23
3	4	955	83.4	83.8	83.1	0.54	0.67	0.74	7.41	960	81.4	83.1	83.6	0.46	0.59	0.68	7.34
4	5.5	955	84.9	85.0	84.3	0.55	0.68	0.74	9.74	960	83.0	84.4	84.9	0.47	0.61	0.69	9.50
5.5	7.5	955	86.4	86.3	85.7	0.56	0.68	0.75	13.0	965	84.6	85.7	86.2	0.47	0.61	0.69	12.9
7.5	10	965	88.7	88.6	87.7	0.68	0.79	0.84	15.5	970	87.8	88.6	88.5	0.61	0.73	0.80	14.7
9.2	12.5	965	88.9	88.8	88.1	0.68	0.79	0.84	18.9	970	88.0	88.8	88.8	0.61	0.73	0.80	18.0
11	15	965	89.6	89.5	88.8	0.66	0.77	0.83	22.7	970	88.4	89.3	89.3	0.59	0.71	0.79	21.7
15	20	965	90.6	90.4	89.7	0.74	0.84	0.88	28.9	970	89.9	90.5	90.6	0.67	0.79	0.85	27.1
18.5	25	970	91.5	91.4	90.8	0.71	0.80	0.84	36.9	975	90.5	91.2	91.3	0.63	0.74	0.80	35.2
22	30	970	92.0	91.8	91.2	0.70	0.79	0.84	43.6	975	90.8	91.5	91.6	0.61	0.73	0.80	41.8
30	40	980	92.8	92.5	92.1	0.75	0.83	0.87	56.9	985	92.2	92.6	92.7	0.68	0.79	0.84	53.6
37	50	980	93.2	93.0	92.6	0.77	0.84	0.87	69.8	985	92.7	93.2	93.2	0.70	0.80	0.85	65.0
45	60	980	93.7	93.6	93.1	0.72	0.81	0.84	87.4	985	93.1	93.5	93.5	0.65	0.76	0.80	83.7
55	75	980	93.8	93.8	93.5	0.72	0.82	0.85	105	985	93.3	93.6	93.9	0.65	0.77	0.82	99.4
75	100	990	94.3	94.3	94.0	0.73	0.82	0.84	144	990	93.7	94.2	94.2	0.66	0.77	0.81	137
90	125	990	94.6	94.5	94.2	0.76	0.82	0.85	171	990	94.2	94.5	94.6	0.69	0.78	0.83	159
110	150	990	94.7	94.9	94.5	0.76	0.82	0.85	208	990	94.2	94.8	94.9	0.69	0.78	0.83	194
132	175	990	94.9	95.0	94.8	0.75	0.83	0.85	249	990	94.3	94.9	95.0	0.68	0.78	0.83	233
160	220	990	95.0	95.2	95.0	0.74	0.82	0.85	301	990	94.5	95.1	95.2	0.67	0.78	0.83	282
185	250	990	95.2	95.4	95.2	0.73	0.82	0.84	351	990	94.7	95.3	95.4	0.66	0.77	0.81	333
200	270	990	95.3	95.4	95.2	0.73	0.82	0.85	376	990	94.8	95.3	95.4	0.66	0.77	0.82	356
220	300	985	95.3	95.4	95.2	0.73	0.81	0.84	418	990	95.0	95.5	95.6	0.66	0.77	0.82	390
250	340	990	95.5	95.5	95.4	0.70	0.79	0.83	480	990	95.1	95.4	95.5	0.62	0.73	0.79	461
260	350	990	95.5	95.5	95.4	0.70	0.79	0.83	499	990	95.1	95.4	95.5	0.62	0.73	0.79	479
280	380	990	95.6	95.6	95.5	0.68	0.78	0.82	543	990	95.2	95.5	95.6	0.61	0.72	0.78	522
315*	430	995	95.6	95.7	95.5	0.70	0.79	0.83	604	995	95.2	95.6	95.6	0.62	0.73	0.79	580
355*	480	990	95.4	95.7	95.7	0.64	0.75	0.79	713	990	95.2	95.7	95.9	0.62	0.73	0.79	652
400*	550	990	95.7	95.9	95.9	0.67	0.77	0.81	782	990	95.2	95.7	95.9	0.60	0.71	0.77	754
Optional Frames																	
1.5	2	935	81.5	81.0	79.5	0.55	0.68	0.75	3.82	950	79.5	80.7	80.8	0.48	0.61	0.70	3.69
3	4	955	83.4	83.8	83.1	0.54	0.67	0.74	7.41	960	81.4	83.1	83.6	0.46	0.59	0.68	7.34
5.5	7.5	965	87.9	87.9	86.9	0.67	0.78	0.83	11.6	970	87.0	87.9	87.8	0.60	0.73	0.79	11.0
37	50	980	93.1	92.9	92.4	0.76	0.83	0.87	69.9	985	92.8	93.2	93.2	0.69	0.79	0.85	65.0
45	60	980	93.4	93.2	92.8	0.79	0.86	0.88	83.7	985	93.3	93.6	93.7	0.73	0.82	0.86	77.7
75	100	985	94.1	94.2	93.9	0.73	0.82	0.85	143	990	93.7	94.2	94.3	0.66	0.77	0.83	133
160	220	990	94.5	95.9	96.0	0.70	0.80	0.82	309	990	93.9	95.8	96.0	0.60	0.74	0.80	290
185	250	990	94.4	95.5	95.7	0.70	0.79	0.82	358	990	94.0	95.5	95.8	0.60	0.71	0.78	344
200	270	990	95.0	95.6	95.7	0.70	0.79	0.82	387	990	94.4	95.4	95.7	0.62	0.73	0.79	368
220	300	990	94.2	95.4	95.7	0.72	0.80	0.82	426	995	93.4	95.0	95.8	0.62	0.74	0.79	404

W22 - High Efficiency

Output		Frame	Full load torque (Nm)	Locked rotor current Il/In	Locked rotor torque Tl/Tn	Break-down torque Tb/Tn	Inertia J (kgm²)	Allowable locked rotor time (s)		Weight (kg)	Sound dB (A)	400 V							
												Rated speed (rpm)	% of full load						Full load current In (A)
													Efficiency			Power factor			
kW	HP							Hot	Cold				50	75	100	50	75	100	
VIII pole - 750 rpm - 50 Hz																			
0.12	0.16	71	1.76	2.3	1.9	2.0	0.00083	172	378	9.5	41	650	40.0	48.0	50.0	0.35	0.43	0.52	0.666
0.18	0.25	80	2.57	3.1	1.9	2.1	0.0024	48	106	11.5	42	670	47.0	53.0	55.0	0.44	0.55	0.65	0.727
0.25	0.33	80	3.57	3.2	1.9	2.1	0.0029	42	92	13.5	42	670	49.0	55.0	57.0	0.43	0.55	0.66	0.959
0.37	0.5	90S	5.12	3.5	2.1	2.1	0.0044	37	81	18.0	43	690	56.0	62.0	62.0	0.41	0.52	0.62	1.39
0.55	0.75	90L	7.67	3.5	1.9	2.0	0.0060	31	68	22.0	43	685	61.0	64.0	64.0	0.44	0.56	0.66	1.88
0.75	1	100L	10.1	4.6	2.0	2.4	0.0110	42	92	28.5	50	710	71.0	74.0	74.0	0.40	0.52	0.62	2.36
1.1	1.5	100L	14.9	4.6	2.1	2.3	0.0127	29	64	30.5	50	705	71.0	75.0	75.0	0.40	0.53	0.62	3.41
1.5	2	112M	20.5	4.7	2.4	2.3	0.0202	29	64	39.0	46	700	77.0	79.0	79.0	0.44	0.57	0.67	4.09
2.2	3	132S	30.0	5.5	2.2	2.4	0.0592	25	55	62.0	48	700	81.0	81.5	81.0	0.52	0.65	0.72	5.44
3	4	132M	41.0	5.5	2.3	2.4	0.0740	19	42	66.0	48	700	82.0	82.5	82.0	0.54	0.66	0.73	7.23
4	5.5	160M	52.7	4.7	2.0	2.2	0.1221	29	64	107	51	725	84.0	85.0	85.0	0.52	0.65	0.72	9.43
5.5	7.5	160M	72.5	4.7	2.0	2.2	0.1652	21	46	120	51	725	85.0	86.0	85.5	0.52	0.65	0.73	12.7
7.5	10	160L	98.8	4.9	2.2	2.3	0.1652	22	48	139	51	725	86.0	87.0	87.0	0.52	0.65	0.73	17.0
9.2	12.5	180M	121	6.0	2.0	2.5	0.2620	11	24	156	51	725	88.0	88.0	87.5	0.63	0.75	0.82	18.5
11	15	180L	145	6.0	2.1	2.4	0.2620	11	24	175	51	725	88.0	88.5	88.0	0.67	0.77	0.83	21.7
15	20	200L	196	4.9	1.9	2.0	0.5023	30	66	226	53	730	90.0	90.5	90.0	0.58	0.70	0.76	31.7
18.5	25	225S/M	241	6.3	2.0	2.4	0.8472	17	37	339	56	735	91.5	91.9	91.7	0.65	0.77	0.82	35.5
22	30	225S/M	286	6.1	2.0	2.4	0.9884	16	35	358	56	735	91.7	92.0	92.0	0.67	0.78	0.83	41.6
30	40	250S/M	390	6.6	2.1	2.7	1.22	13	29	433	56	735	92.0	92.4	92.3	0.68	0.79	0.83	56.5
37	50	280S/M	478	5.6	1.8	2.1	2.64	26	57	614	59	740	93.0	93.5	93.5	0.64	0.74	0.80	71.4
45	60	280S/M	581	5.8	1.9	2.1	3.10	23	51	660	59	740	93.4	93.8	93.8	0.64	0.74	0.80	86.6
55	75	315S/M	710	5.8	1.8	2.1	3.45	32	70	851	62	740	93.7	94.2	94.2	0.66	0.76	0.80	105
75	100	315S/M	968	5.9	1.8	2.1	4.37	30	66	951	62	740	94.1	94.5	94.6	0.68	0.77	0.81	141
90	125	315S/M	1160	6.0	1.9	2.1	5.29	26	57	1020	62	740	94.4	94.7	94.7	0.68	0.77	0.81	169
110	150	315L	1420	6.0	1.9	2.1	12.6	28	62	1244	68	740	94.6	94.8	94.8	0.67	0.76	0.80	209
132	175	315L	1700	6.3	2.0	2.3	13.2	20	44	1352	68	740	94.8	95.1	95.1	0.64	0.75	0.80	250
160	220	355M/L	2050	6.0	1.5	2.3	16.3	54	119	1616	70	745	95.2	95.6	95.6	0.63	0.74	0.80	302
185	250	355M/L	2370	6.1	1.5	2.3	17.3	48	106	1691	70	745	95.2	95.6	95.6	0.62	0.72	0.78	358
200	270	355M/L	2570	6.3	1.6	2.3	19.5	48	106	1765	70	745	95.3	95.6	95.6	0.63	0.74	0.80	377
220	300	355M/L	2820	6.3	1.5	2.3	20.4	48	106	1875	70	745	95.4	95.7	95.7	0.63	0.74	0.79	420
250*	340	355A/B	3210	6.2	1.5	2.4	21.6	47	103	2092	70	745	95.1	95.7	95.8	0.62	0.73	0.79	477
280*	380	355A/B	3590	6.4	1.6	2.4	25.0	44	97	2279	70	745	95.1	95.7	95.8	0.61	0.73	0.79	534
Optional Frames																			
55	75	280S/M	710	5.8	2.0	2.1	3.45	24	53	710	59	740	93.7	94.2	94.1	0.64	0.75	0.80	105
110	150	315S/M	1420	6.0	2.0	2.3	5.53	15	33	1300	62	740	94.7	95.0	95.0	0.65	0.75	0.81	206
110	150	355M/L	1410	5.8	1.3	2.1	12.6	48	106	1379	70	745	94.6	95.2	95.2	0.63	0.74	0.79	211
132	175	355M/L	1690	5.6	1.3	2.0	13.2	50	110	1473	70	745	95.0	95.5	95.4	0.64	0.75	0.80	250

Notes:
(1) Efficiency values are given according to IEC 60034-2-1. They are calculated according to indirect method, with stray load losses determined by measurement.
(*) Fitted with air deflector in the drive end side.

W22 - High Efficiency

Output		380 V								415 V							
		Rated speed	% of full load						Full load current	Rated speed	% of full load						Full load current
			Efficiency			Power Factor					Efficiency			Power Factor			
kW	HP	(rpm)	50	75	100	50	75	100	In (A)	(rpm)	50	75	100	50	75	100	In (A)
VIII pole - 750 rpm - 50 Hz																	
0.12	0.16	635	42.9	50.1	50.8	0.37	0.47	0.56	0.641	655	37.1	45.7	48.8	0.34	0.41	0.49	0.698
0.18	0.25	660	49.3	54.4	54.9	0.47	0.59	0.69	0.722	675	45.0	51.8	54.5	0.42	0.53	0.62	0.741
0.25	0.33	660	51.1	56.2	56.8	0.47	0.59	0.70	0.955	675	47.0	53.8	56.8	0.42	0.53	0.63	0.972
0.37	0.5	680	59.5	63.8	62.4	0.44	0.56	0.67	1.34	695	53.1	59.9	60.9	0.39	0.49	0.59	1.43
0.55	0.75	675	63.3	65.1	63.5	0.47	0.61	0.70	1.88	690	58.5	62.8	63.9	0.41	0.53	0.63	1.90
0.75	1	705	73.0	75.0	73.9	0.44	0.57	0.65	2.37	715	69.2	73.0	73.7	0.38	0.49	0.59	2.40
1.1	1.5	700	73.6	76.2	74.9	0.45	0.57	0.66	3.38	705	68.8	73.6	74.5	0.37	0.49	0.59	3.48
1.5	2	695	78.8	79.6	78.5	0.49	0.61	0.70	4.15	705	75.3	78.2	78.9	0.41	0.53	0.63	4.20
2.2	3	695	81.8	81.5	79.9	0.57	0.69	0.75	5.58	705	80.1	81.4	81.4	0.49	0.62	0.70	5.37
3	4	690	82.7	82.4	80.8	0.58	0.70	0.75	7.52	705	81.1	82.4	82.5	0.50	0.63	0.71	7.13
4	5.5	720	84.8	85.0	84.4	0.56	0.68	0.74	9.73	730	83.2	84.7	85.2	0.49	0.62	0.70	9.33
5.5	7.5	720	85.8	86.0	84.9	0.56	0.68	0.75	13.1	725	84.2	85.7	85.7	0.49	0.62	0.71	12.6
7.5	10	720	86.8	87.2	86.6	0.56	0.69	0.76	17.3	725	85.1	86.7	87.1	0.49	0.62	0.71	16.9
9.2	12.5	720	88.5	87.9	86.8	0.67	0.78	0.84	19.2	725	87.4	87.9	87.8	0.59	0.72	0.80	18.2
11	15	720	88.4	88.3	87.2	0.71	0.80	0.85	22.5	725	87.5	88.5	88.4	0.64	0.75	0.81	21.4
15	20	725	90.5	90.4	89.4	0.62	0.73	0.78	32.7	730	89.4	90.4	90.2	0.55	0.67	0.74	31.3
18.5	25	730	91.8	91.8	91.2	0.69	0.80	0.84	36.7	735	91.1	91.9	91.9	0.62	0.74	0.80	35.0
22	30	730	91.9	91.8	91.4	0.70	0.81	0.85	43.0	735	91.4	92.0	92.2	0.64	0.76	0.82	40.5
30	40	730	92.3	92.3	91.8	0.73	0.82	0.85	58.4	735	91.6	92.3	92.5	0.64	0.76	0.81	55.7
37	50	735	93.3	93.4	93.1	0.68	0.77	0.82	73.6	740	92.6	93.4	93.6	0.61	0.72	0.78	70.5
45	60	735	93.3	93.9	94.0	0.66	0.77	0.81	89.8	740	92.5	93.5	94.1	0.58	0.70	0.77	86.4
55	75	740	94.0	94.2	93.9	0.70	0.79	0.82	109	740	93.3	94.1	94.3	0.62	0.73	0.78	104
75	100	740	94.4	94.5	94.3	0.72	0.80	0.82	147	740	93.8	94.4	94.7	0.64	0.75	0.80	138
90	125	740	94.7	94.7	94.4	0.72	0.80	0.82	177	740	94.1	94.6	94.8	0.64	0.75	0.80	165
110	150	740	94.8	94.7	94.5	0.71	0.79	0.81	218	740	94.3	94.7	94.9	0.64	0.74	0.79	204
132	175	740	94.6	95.2	95.1	0.68	0.78	0.82	257	740	94.5	95.0	95.1	0.61	0.72	0.78	248
160	220	745	95.6	95.7	95.6	0.68	0.78	0.82	310	745	94.8	95.4	95.6	0.59	0.71	0.78	299
185	250	745	95.6	95.8	95.6	0.67	0.76	0.81	363	745	94.7	95.3	95.4	0.57	0.68	0.75	360
200	270	745	95.7	95.7	95.6	0.68	0.78	0.83	383	745	94.9	95.4	95.5	0.59	0.71	0.78	374
220	300	745	95.8	95.9	95.7	0.68	0.78	0.81	431	745	95.0	95.5	95.6	0.59	0.71	0.77	416
250*	340	745	95.5	95.8	95.8	0.67	0.77	0.81	489	745	94.7	95.5	95.7	0.58	0.70	0.77	472
280*	380	745	95.5	95.9	95.9	0.66	0.76	0.81	548	745	94.7	95.5	95.7	0.57	0.70	0.77	529
Optional Frames																	
55	75	740	94.0	94.1	93.7	0.68	0.78	0.82	109	740	93.4	94.1	94.3	0.60	0.72	0.78	104
110	150	735	94.7	95.0	95.0	0.68	0.77	0.82	215	740	95.0	95.2	95.2	0.63	0.73	0.79	203
110	150	740	94.0	95.2	95.1	0.65	0.76	0.81	217	745	93.0	95.2	95.2	0.59	0.77	0.77	209
132	175	740	94.5	95.4	95.3	0.66	0.75	0.81	260	745	93.5	95.4	95.4	0.60	0.71	0.77	250

W22 - Premium Efficiency
Exceeds IE3 (1) - EFF1 (2)

Output		Frame	Full load torque (Nm)	Locked rotor current Il/In	Locked rotor torque Tl/Tn	Break-down torque Tb/Tn	Inertia J (kgm²)	Allowable locked rotor time (s)		Weight (kg)	Sound dB (A)	400 V							
												Rated speed (rpm)	% of full load						Full load current In (A)
													Efficiency			Power factor			
kW	HP							Hot	Cold				50	75	100	50	75	100	
II Pole - 3000 rpm - 50 Hz																			
0.12	0.16	63	0.410	5.4	3.3	3.3	0.00014	30	66	6.2	52	2820	58.0	63.0	65.0	0.54	0.67	0.76	0.351
0.18	0.25	63	0.610	5.2	3.2	3.2	0.00016	22	48	6.7	52	2800	61.0	66.0	67.0	0.55	0.68	0.77	0.504
0.25	0.33	63	0.850	5.5	3.2	3.2	0.00020	17	37	7.2	52	2805	63.0	68.0	69.0	0.54	0.68	0.77	0.679
0.37	0.5	71	1.27	6.2	3.0	3.0	0.00040	15	33	7.5	56	2790	73.0	74.5	74.5	0.66	0.79	0.85	0.843
0.55	0.75	71	1.90	5.9	3.0	3.0	0.00047	18	40	8.5	56	2770	75.0	76.0	76.0	0.68	0.81	0.86	1.21
0.75	1	80	2.54	7.5	3.5	3.5	0.00076	25	55	13.5	59	2825	80.0	82.0	82.0	0.63	0.76	0.82	1.61
1.1	1.5	80	3.71	7.4	3.6	3.6	0.0015	23	51	15.0	59	2830	81.0	83.5	83.5	0.63	0.76	0.82	2.32
1.5	2	90S	4.99	7.6	3.3	3.3	0.0020	15	33	18.5	62	2875	83.0	85.0	85.0	0.64	0.76	0.83	3.07
2.2	3	90L	7.32	7.5	3.4	3.5	0.0026	12	26	23.5	62	2870	86.0	86.5	86.3	0.65	0.77	0.83	4.43
3	4	100L	9.85	8.5	3.4	3.4	0.0064	15	33	32.0	67	2910	85.5	87.3	87.3	0.69	0.81	0.86	5.77
4	5.5	112M	13.2	7.7	2.9	3.5	0.0080	22	48	41.0	64	2900	88.1	89.1	89.5	0.69	0.80	0.86	7.50
5.5	7.5	132S	17.9	8.3	2.6	3.2	0.0216	23	51	65.0	67	2930	88.3	89.7	90.0	0.72	0.82	0.87	10.1
7.5	10	132S	24.4	8.5	3.0	3.4	0.0252	17	37	69.0	67	2935	89.1	90.5	90.8	0.69	0.80	0.86	13.9
9.2	12.5	132M	30.0	8.5	2.9	3.3	0.0306	16	35	78.0	67	2930	90.4	91.1	91.1	0.75	0.84	0.88	16.6
11	15	160M	35.6	8.0	2.7	3.5	0.0530	17	37	115	67	2950	91.0	92.3	92.7	0.71	0.81	0.85	20.1
15	20	160M	48.6	8.0	2.6	3.3	0.0588	12	26	119	67	2950	91.5	92.5	92.9	0.71	0.81	0.86	27.1
18.5	25	160L	59.9	8.4	2.8	3.6	0.0677	8	18	136	67	2950	92.0	92.9	93.2	0.70	0.80	0.86	33.3
22	30	180M	71.1	8.0	2.5	3.3	0.1192	11	24	176	67	2955	92.5	93.3	93.7	0.73	0.82	0.87	39.0
30	40	200L	96.7	7.3	2.6	2.9	0.2063	20	44	244	72	2965	92.8	94.0	94.1	0.73	0.82	0.86	53.5
37	50	200L	119	7.3	2.6	2.9	0.2242	17	37	265	72	2965	93.3	94.0	94.6	0.73	0.82	0.86	65.6
45	60	225S/M	145	8.0	2.4	3.2	0.5202	12	26	416	74	2970	94.6	95.1	95.1	0.77	0.85	0.89	76.7
55	75	250S/M	177	7.9	2.5	2.9	0.5561	14	31	485	74	2965	94.9	95.3	95.4	0.81	0.87	0.89	93.5
75	100	280S/M	240	7.6	2.3	2.9	1.27	32	70	727	77	2980	94.5	95.3	95.6	0.82	0.88	0.90	126
90	125	280S/M	289	7.4	2.2	2.8	1.41	30	66	762	77	2980	94.8	95.6	95.8	0.84	0.89	0.90	151
110	150	315S/M	353	7.6	2.1	3.0	1.51	30	66	962	77	2980	94.7	95.7	96.1	0.80	0.87	0.89	186
132	175	315S/M	423	7.5	2.1	2.8	1.74	30	66	1048	77	2980	95.2	95.9	96.3	0.83	0.89	0.90	220
160	220	315S/M	513	7.9	2.3	2.8	2.12	24	53	1129	77	2980	95.6	96.2	96.6	0.83	0.89	0.91	263
185	250	315S/M	593	7.8	2.4	2.7	2.12	22	48	1197	77	2980	95.7	96.4	96.6	0.83	0.89	0.90	307
200	270	315L	641	8.2	2.6	2.8	2.17	17	37	1305	78	2980	96.0	96.5	96.7	0.83	0.89	0.90	332
220	300	315L	705	7.7	2.4	2.6	5.17	24	53	1370	78	2980	96.1	96.5	96.7	0.84	0.89	0.91	361
250	340	315L	802	7.8	2.5	2.7	4.56	17	37	1434	78	2980	96.4	96.6	96.8	0.86	0.90	0.91	410
260	350	315L	834	7.8	2.5	2.7	4.56	17	37	1434	78	2980	96.4	96.6	96.8	0.86	0.90	0.91	426
280	380	315L	898	8.0	2.6	3.0	4.32	22	48	1510	78	2980	96.2	96.8	96.8	0.87	0.90	0.91	459
315*	430	355M/L	1010	7.7	2.1	2.5	4.01	18	40	1838	80	2980	96.4	96.8	96.9	0.87	0.90	0.91	516
Optional Frames																			
0.75	1	90S	2.47	8.2	3.3	3.4	0.00093	24	53	17.0	62	2900	79.0	82.5	83.0	0.63	0.75	0.82	1.59
1.1	1.5	90S	3.65	7.8	3.3	3.3	0.0018	19	42	17.5	62	2880	82.0	84.2	84.5	0.63	0.75	0.82	2.29
2.2	3	100L	7.22	8.5	3.2	3.3	0.0059	22	48	31.0	67	2910	85.0	86.6	86.6	0.71	0.82	0.87	4.21
4	5.5	132S	13.0	7.5	2.3	3.1	0.0180	24	53	61.0	67	2930	86.9	88.7	89.0	0.73	0.82	0.87	7.46
5.5	7.5	132M	17.9	8.3	2.6	3.2	0.0216	23	51	65.0	67	2930	88.3	89.7	90.0	0.72	0.82	0.87	10.1
7.5	10	132M	24.4	8.5	3.0	3.4	0.0252	17	37	69.0	67	2935	89.1	90.5	90.8	0.69	0.80	0.86	13.9
11	15	132M	35.9	8.2	2.7	3.0	0.0306	11	24	78.0	67	2925	90.6	91.1	91.2	0.75	0.85	0.89	19.6
11	15	160L	35.6	8.0	2.7	3.5	0.0530	17	37	120	67	2950	91.0	92.3	92.7	0.71	0.81	0.85	20.1
15	20	160L	48.6	8.0	2.6	3.3	0.0588	12	26	124	67	2950	91.5	92.5	92.9	0.71	0.81	0.86	27.2
18.5	25	180M	59.9	7.8	2.4	3.2	0.1135	13	29	172	67	2950	92.0	92.9	93.2	0.75	0.84	0.88	32.6
22	30	180L	71.1	8.0	2.5	3.3	0.1192	11	24	182	67	2955	92.5	93.3	93.7	0.73	0.82	0.87	39.0
75	100	250S/M	242	7.9	2.5	2.8	1.27	11	24	500	74	2965	95.0	95.3	95.4	0.83	0.87	0.89	127
110	150	280S/M	353	7.9	2.3	2.9	1.51	21	46	819	77	2980	94.8	95.7	96.0	0.82	0.88	0.90	184
200	270	355M/L	640	7.5	1.9	2.6	4.83	28	62	1537	80	2985	95.7	96.5	96.7	0.84	0.89	0.90	332
220	300	355M/L	704	7.7	2.0	2.7	5.17	22	48	1585	80	2985	95.8	96.5	96.7	0.85	0.88	0.90	365
250	340	355M/L	800	7.7	2.1	2.8	5.75	22	48	1665	80	2985	96.0	96.7	96.8	0.86	0.90	0.91	410
260	350	355M/L	832	7.7	2.1	2.8	5.75	22	48	1665	80	2985	96.0	96.7	96.8	0.86	0.90	0.91	426
280	380	355M/L	898	7.5	2.0	2.4	5.75	20	44	1751	80	2980	96.2	96.7	96.8	0.88	0.90	0.91	459

Notes:
(1) Efficiency values are given according to IEC 60034-2-1. They are calculated according to indirect method, with stray load losses determined by measurement.
(2) The CEMEP reference shown means that the efficiency will meet EFF1 if tested according to IEC 60034-2.
(*) Fitted with air deflector in the drive end side.

W22 - Premium Efficiency
Exceeds IE3 (1) - EFF1 (2)

Output		380 V								415 V							
		Rated speed	% of full load						Full load current	Rated speed	% of full load						Full load current
			Efficiency			Power Factor					Efficiency			Power Factor			
kW	HP	(rpm)	50	75	100	50	75	100	In (A)	(rpm)	50	75	100	50	75	100	In (A)
II Pole - 3000 rpm - 50 Hz																	
0.12	0.16	2795	59.0	63.5	64.8	0.58	0.71	0.79	0.356	2835	57.0	62.4	64.9	0.51	0.64	0.73	0.352
0.18	0.25	2775	62.6	66.6	66.7	0.59	0.73	0.82	0.500	2815	59.6	65.2	66.7	0.51	0.64	0.74	0.507
0.25	0.33	2780	64.6	68.7	68.8	0.59	0.73	0.81	0.682	2820	61.5	67.2	68.7	0.51	0.64	0.74	0.684
0.37	0.5	2765	73.6	74.3	73.6	0.71	0.82	0.87	0.878	2805	72.4	74.5	75.0	0.63	0.76	0.83	0.827
0.55	0.75	2740	75.6	75.7	75.0	0.73	0.84	0.88	1.27	2790	74.4	76.0	76.5	0.65	0.78	0.84	1.19
0.75	1	2805	80.9	82.2	81.6	0.68	0.80	0.85	1.64	2835	79.1	81.7	82.1	0.59	0.72	0.79	1.61
1.1	1.5	2810	82.0	83.7	83.1	0.69	0.80	0.85	2.37	2840	80.0	83.0	83.4	0.58	0.72	0.79	2.32
1.5	2	2860	83.7	85.0	84.4	0.69	0.80	0.85	3.18	2885	82.2	84.8	85.2	0.59	0.72	0.80	3.06
2.2	3	2855	86.5	86.4	85.6	0.70	0.81	0.86	4.54	2880	85.3	86.4	86.5	0.61	0.74	0.81	4.37
3	4	2900	86.0	87.4	86.9	0.75	0.84	0.88	5.96	2915	85.0	87.2	87.4	0.66	0.78	0.84	5.68
4	5.5	2890	88.6	89.2	89.1	0.73	0.83	0.88	7.75	2905	87.5	89.0	89.6	0.65	0.77	0.84	7.39
5.5	7.5	2920	88.7	89.7	89.7	0.76	0.85	0.89	10.5	2935	87.8	89.6	90.1	0.68	0.79	0.85	10.0
7.5	10	2925	89.6	90.6	90.6	0.74	0.84	0.88	14.3	2940	88.6	90.3	90.8	0.65	0.77	0.83	13.8
9.2	12.5	2920	90.7	91.0	90.8	0.79	0.87	0.90	17.1	2935	90.1	91.0	91.3	0.71	0.82	0.87	16.1
11	15	2945	91.3	92.3	92.5	0.75	0.84	0.87	20.8	2955	90.7	92.2	92.8	0.68	0.79	0.83	19.9
15	20	2945	91.8	92.5	92.6	0.75	0.84	0.88	28.0	2955	91.2	92.4	93.0	0.68	0.79	0.84	26.7
18.5	25	2945	92.4	92.9	93.0	0.74	0.83	0.88	34.3	2955	91.6	92.8	93.3	0.66	0.77	0.84	32.8
22	30	2950	92.7	93.2	93.4	0.77	0.84	0.88	40.7	2960	92.3	93.3	93.8	0.70	0.80	0.86	37.9
30	40	2960	93.1	94.0	94.0	0.77	0.85	0.88	55.1	2970	92.6	93.9	94.2	0.69	0.79	0.84	52.7
37	50	2960	93.5	94.0	94.4	0.78	0.85	0.88	67.7	2970	93.1	93.9	94.7	0.69	0.79	0.84	64.7
45	60	2965	94.6	94.9	94.8	0.79	0.86	0.90	80.1	2970	94.5	95.2	95.3	0.75	0.84	0.88	74.6
55	75	2960	94.9	95.0	95.1	0.83	0.88	0.90	97.6	2965	94.8	95.3	95.5	0.79	0.86	0.88	91.0
75	100	2975	94.6	95.2	95.4	0.84	0.89	0.91	131	2980	94.4	95.3	95.7	0.80	0.87	0.90	121
90	125	2975	94.9	95.5	95.6	0.86	0.90	0.90	159	2980	94.7	95.6	95.9	0.82	0.88	0.90	145
110	150	2975	94.8	95.7	96.0	0.83	0.89	0.90	193	2980	94.6	95.7	96.1	0.78	0.86	0.88	181
132	175	2975	95.3	95.8	96.1	0.85	0.90	0.90	232	2980	95.1	95.9	96.4	0.81	0.88	0.90	212
160	220	2975	95.7	96.1	96.4	0.85	0.90	0.92	274	2980	95.5	96.2	96.7	0.81	0.88	0.91	253
185	250	2975	95.4	96.1	96.3	0.85	0.90	0.90	324	2980	95.6	96.4	96.7	0.81	0.88	0.90	296
200	270	2975	96.0	96.4	96.5	0.85	0.90	0.91	346	2980	95.9	96.5	96.8	0.81	0.88	0.90	319
220	300	2975	93.1	96.4	96.5	0.86	0.90	0.91	381	2980	96.1	96.5	96.8	0.83	0.88	0.91	347
250	340	2975	96.4	96.5	96.6	0.88	0.91	0.91	432	2980	96.4	96.7	96.9	0.85	0.89	0.91	394
260	350	2975	96.4	96.5	96.6	0.88	0.91	0.91	449	2980	96.4	96.7	96.9	0.85	0.89	0.91	410
280	380	2975	96.2	96.6	96.6	0.87	0.91	0.91	484	2980	96.2	96.8	96.8	0.85	0.89	0.90	447
315*	430	2980	94.2	95.5	95.4	0.89	0.92	0.92	545	2985	95.2	95.6	95.7	0.86	0.90	0.92	498
Optional Frames																	
0.75	1	2885	79.5	82.5	82.5	0.68	0.78	0.84	1.64	2910	78.4	82.3	83.1	0.60	0.72	0.79	1.59
1.1	1.5	2865	82.6	84.2	84.0	0.68	0.79	0.84	2.37	2890	81.4	84.0	84.7	0.59	0.72	0.80	2.26
2.2	3	2900	85.4	86.5	86.1	0.75	0.84	0.89	4.36	2915	84.7	86.5	86.8	0.68	0.80	0.86	4.10
4	5.5	2920	87.1	88.6	88.7	0.76	0.85	0.89	7.70	2935	86.6	88.6	89.2	0.69	0.80	0.86	7.25
5.5	7.5	2920	88.7	89.7	89.7	0.76	0.85	0.89	10.5	2935	87.8	89.6	90.1	0.68	0.79	0.85	10.0
7.5	10	2925	89.6	90.6	90.6	0.74	0.84	0.88	14.3	2940	88.6	90.3	90.8	0.65	0.77	0.83	13.8
11	15	2915	90.9	91.0	90.8	0.80	0.87	0.90	20.5	2930	90.2	91.1	91.4	0.72	0.82	0.87	19.2
11	15	2945	91.3	92.3	92.5	0.75	0.84	0.87	20.8	2955	90.7	92.2	92.8	0.68	0.79	0.83	19.9
15	20	2945	91.8	92.5	92.6	0.75	0.84	0.88	28.0	2955	91.2	92.4	93.0	0.68	0.79	0.84	26.7
18.5	25	2945	92.1	92.8	92.8	0.78	0.86	0.89	34.0	2955	91.9	92.9	93.4	0.72	0.82	0.87	31.7
22	30	2950	92.7	93.2	93.4	0.77	0.84	0.88	40.7	2960	92.3	93.3	93.8	0.70	0.80	0.86	37.9
75	100	2960	95.0	95.1	95.1	0.85	0.88	0.90	133	2965	94.9	95.4	95.6	0.81	0.86	0.88	124
110	150	2975	94.9	95.6	95.8	0.84	0.89	0.91	192	2980	94.7	95.7	96.1	0.80	0.87	0.90	177
200	270	2980	93.9	95.2	95.5	0.90	0.92	0.92	346	2985	93.5	95.1	95.6	0.88	0.90	0.91	320
220	300	2985	95.5	96.2	96.4	0.87	0.91	0.92	377	2990	95.0	96.0	96.3	0.83	0.89	0.91	349
250	340	2980	95.5	96.3	96.4	0.89	0.92	0.93	424	2985	95.4	96.3	96.4	0.86	0.91	0.92	392
260	350	2980	95.5	96.3	96.4	0.89	0.92	0.93	441	2985	95.4	96.3	96.4	0.86	0.91	0.92	408
280	380	2975	95.2	95.5	95.4	0.87	0.90	0.91	490	2980	95.2	95.6	95.7	0.83	0.88	0.91	447

W22 - Premium Efficiency
Exceeds IE3 (1) - EFF1 (2)

Output		Frame	Full load torque (Nm)	Locked rotor current Il/In	Locked rotor torque Tl/Tn	Break-down torque Tb/Tn	Inertia J (kgm²)	Allowable locked rotor time (s)		Weight (kg)	Sound dB (A)	400 V							
												Rated speed (rpm)	% of full load						Full load current In (A)
													Efficiency			Power factor			
kW	HP							Hot	Cold				50	75	100	50	75	100	
IV pole - 1500 rpm - 50 Hz																			
0.12	0.16	63	0.840	4.4	2.1	2.3	0.00044	30	66	5.2	44	1370	57.0	62.0	63.0	0.52	0.65	0.75	0.367
0.18	0.25	63	1.26	4.7	2.3	2.4	0.00061	30	66	7.2	44	1370	62.0	64.0	64.5	0.53	0.66	0.75	0.537
0.25	0.33	71	1.74	4.8	2.5	2.6	0.00066	30	66	8.0	43	1370	66.0	69.0	69.5	0.52	0.65	0.74	0.702
0.37	0.5	71	2.58	4.8	2.6	2.6	0.00082	30	66	9.5	43	1370	69.0	72.0	72.0	0.51	0.64	0.73	1.02
0.55	0.75	80	3.70	6.6	2.9	3.2	0.0026	20	44	12.5	44	1420	77.0	79.0	79.5	0.61	0.74	0.80	1.25
0.75	1	80	5.05	6.7	3.0	3.3	0.0035	18	40	14.5	44	1420	80.0	82.0	82.5	0.63	0.76	0.82	1.60
1.1	1.5	90S	7.22	7.6	2.5	3.3	0.0055	15	33	19.5	49	1455	83.0	84.5	84.8	0.59	0.72	0.80	2.34
1.5	2	90L	9.88	7.4	2.6	3.4	0.0066	13	29	23.0	49	1450	84.0	86.0	86.0	0.58	0.72	0.80	3.15
2.2	3	100L	14.7	7.4	3.2	3.5	0.0090	18	40	31.5	53	1435	86.5	87.0	87.0	0.60	0.73	0.80	4.56
3	4	L100L	19.9	7.8	3.5	3.7	0.0120	15	33	37.5	53	1440	87.0	88.0	88.0	0.60	0.73	0.80	6.15
4	5.5	112M	26.4	7.0	2.3	3.1	0.0169	15	33	44.0	56	1450	88.7	89.1	89.1	0.62	0.74	0.81	8.00
5.5	7.5	132S	35.9	8.5	2.4	3.1	0.0543	12	26	65.0	56	1465	87.5	89.0	89.8	0.69	0.79	0.85	10.3
7.5	10	132M	48.9	8.5	2.5	3.4	0.0642	13	29	78.0	56	1465	91.0	91.5	91.5	0.69	0.80	0.85	13.9
9.2	12.5	132M/L	60.0	8.6	2.8	3.5	0.0681	10	22	82.0	56	1465	90.3	91.0	91.0	0.66	0.78	0.84	17.4
9.2	12.5	160M	59.6	7.2	2.5	3.0	0.0803	16	35	109	61	1475	90.0	91.4	91.8	0.66	0.77	0.83	17.4
11	15	160M	71.5	7.0	2.5	3.0	0.1004	17	37	123	61	1470	91.0	91.8	92.2	0.65	0.76	0.83	20.7
15	20	160L	97.5	7.3	2.7	3.2	0.1154	10	22	145	61	1470	91.8	92.5	92.9	0.65	0.76	0.82	28.4
18.5	25	180M	120	7.3	2.7	3.0	0.1973	20	44	180	61	1470	92.2	92.9	93.3	0.64	0.76	0.82	34.9
22	30	180L	143	7.3	2.8	3.3	0.2332	18	40	198	61	1470	92.4	93.0	93.6	0.66	0.77	0.83	40.9
30	40	200L	194	7.3	2.5	3.0	0.3310	16	35	243	65	1480	92.8	93.6	94.2	0.64	0.75	0.82	56.1
37	50	225S/M	239	7.8	2.7	3.0	0.6999	14	31	392	63	1480	94.0	94.6	94.6	0.72	0.81	0.86	65.6
45	60	225S/M	291	7.9	2.8	3.2	0.8398	13	29	420	63	1480	94.2	94.8	94.8	0.70	0.80	0.85	79.4
55	75	250S/M	355	7.9	2.8	3.3	1.15	14	31	507	64	1480	94.6	95.0	95.3	0.71	0.81	0.86	96.9
75	100	280S/M	483	7.6	2.3	2.8	2.17	26	57	729	69	1485	94.7	95.2	95.6	0.75	0.83	0.87	130
90	125	280S/M	579	7.4	2.3	2.8	2.81	25	55	777	69	1485	95.0	95.5	95.8	0.74	0.82	0.86	158
110	150	315S/M	705	7.5	2.6	2.7	3.21	30	66	1010	71	1490	95.4	95.9	96.3	0.74	0.83	0.86	192
132	175	315S/M	846	7.6	2.5	2.6	3.77	26	57	1095	71	1490	95.5	96.0	96.4	0.75	0.83	0.86	230
160	220	315S/M	1030	7.6	2.6	2.6	3.77	22	48	1152	71	1490	95.7	96.2	96.5	0.75	0.83	0.87	275
185	250	315S/M	1190	7.6	2.5	2.5	3.77	18	40	1222	71	1490	95.8	96.3	96.5	0.74	0.83	0.87	318
200	270	315L	1280	7.6	2.5	2.5	3.93	20	44	1332	73	1490	96.1	96.5	96.7	0.74	0.83	0.87	343
220	300	315L	1410	7.8	2.6	2.6	6.86	16	35	1430	73	1490	96.1	96.6	96.7	0.74	0.83	0.86	382
250	340	315L	1600	8.0	2.7	2.6	8.39	16	35	1527	73	1490	96.2	96.6	96.9	0.73	0.82	0.86	433
260	350	315L	1670	8.0	2.7	2.6	8.39	16	35	1527	73	1490	96.2	96.6	96.9	0.73	0.82	0.86	450
280	380	355M/L	1800	7.3	2.3	2.4	9.02	20	44	1695	74	1490	96.3	96.7	96.9	0.74	0.83	0.86	485
315	430	355M/L	2020	7.3	2.3	2.4	11.2	22	48	1772	74	1490	96.4	96.7	96.9	0.74	0.83	0.86	546
355*	480	355M/L	2280	7.2	2.4	2.5	10.3	15	33	1878	74	1490	96.5	96.8	96.9	0.74	0.83	0.86	615
Optional Frames																			
0.75	1	90S	4.93	7.8	2.4	3.3	0.0049	21	46	18.5	49	1455	82.5	84.0	84.5	0.60	0.73	0.80	1.60
1.1	1.5	90L	7.22	7.6	2.5	3.3	0.0055	15	33	19.5	49	1455	83.0	84.5	84.8	0.59	0.72	0.80	2.34
1.5	2	100L	9.95	7.7	3.1	3.4	0.0082	25	55	30.0	53	1440	86.0	87.0	87.0	0.61	0.73	0.80	3.11
2.2	3	112M	14.5	6.8	2.0	3.0	0.0143	31	68	41.0	56	1450	87.5	88.2	88.2	0.62	0.74	0.81	4.44
5.5	7.5	132M	35.9	8.5	2.4	3.1	0.0543	12	26	65.0	56	1465	87.5	89.0	89.8	0.69	0.79	0.85	10.3
11	15	160L	71.5	7.0	2.5	3.0	0.1004	17	37	128	61	1470	91.0	91.8	92.2	0.65	0.76	0.83	20.7
15	20	180M	97.5	7.0	2.5	3.0	0.1615	23	51	168	61	1470	91.9	92.5	92.9	0.66	0.77	0.83	28.1
18.5	25	180L	120	7.3	2.7	3.0	0.1973	20	44	186	61	1470	92.2	92.9	93.3	0.64	0.76	0.82	34.9
37	50	200L	239	7.0	2.6	3.0	0.3861	14	31	284	65	1480	93.3	94.0	94.5	0.64	0.76	0.82	68.9
75	100	250S/M	484	8.4	2.8	3.3	2.17	8	18	531	64	1480	94.7	95.0	95.0	0.73	0.83	0.87	131
110	150	280S/M	708	7.6	2.4	2.8	3.21	24	53	884	69	1485	95.4	95.8	96.0	0.74	0.83	0.87	190
200	270	315S/M	1280	7.6	2.5	2.5	3.93	20	44	1332	71	1490	96.1	96.5	96.7	0.74	0.83	0.87	343
200	270	355M/L	1280	7.6	2.5	2.5	6.86	22	48	1495	74	1490	95.9	96.5	96.7	0.72	0.81	0.85	351
220	300	355M/L	1410	7.4	2.4	2.5	6.86	20	44	1554	74	1490	96.0	96.6	96.8	0.72	0.80	0.85	386
250	340	355M/L	1600	7.3	2.3	2.4	8.12	16	35	1621	74	1490	96.2	96.6	96.9	0.73	0.82	0.85	438
260	350	355M/L	1670	7.3	2.3	2.4	8.12	16	35	1621	74	1490	96.2	96.6	96.9	0.73	0.82	0.85	456

Notes:
(1) Efficiency values are given according to IEC 60034-2-1. They are calculated according to indirect method, with stray load losses determined by measurement.
(2) The CEMEP reference shown means that the efficiency will meet EFF1 if tested according to IEC 60034-2.
(*) Fitted with air deflector in the drive end side.

W22 - Premium Efficiency
Exceeds IE3 (1) - EFF1 (2)

Output		380 V								415 V							
		Rated speed	% of full load						Full load current	Rated speed	% of full load						Full load current
			Efficiency			Power Factor					Efficiency			Power Factor			
kW	HP	(rpm)	50	75	100	50	75	100	In (A)	(rpm)	50	75	100	50	75	100	In (A)
IV pole - 1500 rpm - 50 Hz																	
0.12	0.16	1355	58.6	62.6	62.5	0.56	0.69	0.78	0.374	1380	55.6	61.3	62.9	0.50	0.62	0.72	0.369
0.18	0.25	1355	63.5	64.4	63.9	0.57	0.70	0.78	0.549	1380	60.8	63.5	64.5	0.50	0.63	0.72	0.539
0.25	0.33	1355	67.0	69.1	68.7	0.56	0.69	0.77	0.718	1380	65.1	68.6	69.7	0.50	0.62	0.71	0.703
0.37	0.5	1355	70.0	72.2	71.3	0.55	0.68	0.76	1.04	1380	67.8	71.5	72.3	0.48	0.61	0.71	1.00
0.55	0.75	1410	78.0	79.1	78.9	0.65	0.77	0.83	1.28	1430	76.0	78.9	80.1	0.57	0.71	0.77	1.24
0.75	1	1410	80.8	82.0	81.7	0.68	0.79	0.84	1.66	1425	79.1	81.8	82.8	0.60	0.73	0.80	1.58
1.1	1.5	1450	84.0	84.7	84.3	0.64	0.76	0.83	2.39	1460	82.0	84.1	84.8	0.55	0.69	0.77	2.34
1.5	2	1445	85.0	86.2	85.6	0.63	0.76	0.83	3.21	1454	83.1	85.7	86.1	0.54	0.68	0.77	3.15
2.2	3	1430	87.2	87.1	86.5	0.65	0.77	0.83	4.66	1440	85.7	86.8	87.2	0.57	0.70	0.78	4.50
3	4	1430	87.7	88.0	87.5	0.65	0.77	0.83	6.28	1445	86.3	87.7	88.1	0.56	0.70	0.78	6.07
4	5.5	1445	89.3	89.0	88.5	0.67	0.78	0.83	8.00	1455	88.2	88.9	89.3	0.59	0.72	0.79	8.00
5.5	7.5	1460	88.5	89.0	89.8	0.72	0.81	0.86	10.7	1470	86.5	89.0	89.8	0.65	0.77	0.83	10.2
7.5	10	1460	91.4	91.5	91.2	0.73	0.83	0.87	14.4	1470	90.5	91.4	91.7	0.65	0.77	0.84	13.5
9.2	12.5	1460	91.0	91.1	90.8	0.71	0.82	0.87	17.7	1470	89.5	90.6	90.9	0.62	0.75	0.82	17.2
9.2	12.5	1470	90.4	91.5	91.6	0.70	0.80	0.85	18.0	1475	89.5	91.2	91.9	0.63	0.74	0.81	17.2
11	15	1465	91.3	91.7	91.9	0.69	0.79	0.85	21.4	1470	90.7	91.7	92.3	0.62	0.74	0.81	20.5
15	20	1465	92.2	92.5	92.6	0.69	0.79	0.84	29.3	1470	91.4	92.4	93.0	0.62	0.74	0.80	28.0
18.5	25	1465	92.5	92.9	93.1	0.68	0.79	0.84	35.9	1470	91.8	92.8	93.4	0.61	0.73	0.80	34.4
22	30	1465	92.8	93.1	93.4	0.70	0.80	0.85	42.1	1470	91.9	92.8	93.6	0.62	0.74	0.81	40.4
30	40	1480	93.3	93.8	94.1	0.69	0.79	0.84	57.7	1480	92.4	93.4	94.2	0.60	0.72	0.80	55.4
37	50	1475	94.1	94.5	94.3	0.76	0.83	0.87	68.5	1480	93.8	94.6	94.7	0.69	0.79	0.85	63.9
45	60	1475	94.3	94.7	94.7	0.77	0.82	0.86	83.8	1480	94.0	94.8	94.8	0.67	0.78	0.84	78.6
55	75	1475	94.7	94.9	95.1	0.75	0.83	0.88	100	1480	94.4	94.9	95.4	0.68	0.79	0.85	94.4
75	100	1480	94.8	95.2	95.4	0.78	0.85	0.88	136	1485	94.6	95.2	95.7	0.73	0.82	0.86	127
90	125	1480	95.1	95.4	95.6	0.77	0.84	0.87	164	1485	94.9	95.5	95.9	0.72	0.81	0.85	154
110	150	1490	95.5	95.9	96.2	0.77	0.85	0.87	200	1490	95.2	95.8	96.3	0.71	0.81	0.85	187
132	175	1490	95.6	96.0	96.3	0.78	0.85	0.87	239	1490	95.3	95.9	96.4	0.72	0.81	0.85	224
160	220	1490	95.8	96.2	96.3	0.78	0.85	0.88	287	1490	95.5	96.2	96.6	0.72	0.81	0.86	268
185	250	1485	95.9	96.3	96.3	0.77	0.85	0.88	332	1490	95.6	96.3	96.5	0.71	0.81	0.86	310
200	270	1485	96.2	96.5	96.5	0.77	0.85	0.88	358	1490	95.9	96.5	96.7	0.71	0.81	0.86	335
220	300	1490	96.2	96.6	96.6	0.77	0.85	0.87	398	1490	95.9	96.5	96.7	0.71	0.81	0.85	372
250	340	1490	96.4	96.6	96.8	0.77	0.84	0.87	451	1490	96.0	96.5	96.9	0.70	0.80	0.85	422
260	350	1490	96.4	96.6	96.8	0.77	0.84	0.87	469	1490	96.0	96.5	96.9	0.70	0.80	0.85	439
280	380	1490	96.4	96.7	96.8	0.77	0.85	0.87	505	1490	96.2	96.7	97.0	0.71	0.81	0.85	472
315	430	1490	96.5	96.7	96.8	0.77	0.85	0.87	568	1490	96.3	96.7	97.0	0.71	0.81	0.85	532
355*	480	1490	96.6	96.8	96.8	0.77	0.85	0.87	640	1490	96.4	96.8	97.0	0.72	0.82	0.85	599
Optional Frames																	
0.75	1	1450	83.2	84.1	84.0	0.64	0.76	0.83	1.63	1460	81.8	83.8	84.6	0.56	0.70	0.78	1.58
1.1	1.5	1450	84.0	84.7	84.3	0.64	0.76	0.83	2.39	1460	82.0	84.1	84.8	0.55	0.69	0.77	2.34
1.5	2	1430	86.5	86.9	86.4	0.65	0.77	0.83	3.18	1445	85.6	87.0	87.3	0.58	0.71	0.78	3.06
2.2	3	1445	87.9	88.1	87.6	0.66	0.77	0.83	4.60	1455	87.2	88.2	88.5	0.59	0.72	0.79	4.38
5.5	7.5	1460	88.5	89.0	89.8	0.72	0.81	0.86	10.7	1470	86.5	89.0	89.8	0.65	0.77	0.83	10.2
11	15	1465	91.3	91.7	91.9	0.69	0.79	0.85	21.4	1470	90.7	91.7	92.3	0.62	0.74	0.81	20.5
15	20	1465	92.2	92.5	92.6	0.70	0.80	0.85	29.0	1470	91.6	92.4	93.0	0.63	0.75	0.81	27.7
18.5	25	1465	92.5	92.9	93.1	0.68	0.79	0.84	35.9	1470	91.8	92.8	93.4	0.61	0.73	0.80	34.4
37	50	1480	93.7	94.1	94.4	0.69	0.79	0.84	70.9	1480	92.9	93.8	94.5	0.60	0.73	0.80	68.1
75	100	1475	95.0	95.0	94.8	0.77	0.86	0.88	137	1480	94.4	95.0	95.0	0.70	0.81	0.86	128
110	150	1485	95.5	95.7	95.8	0.77	0.85	0.88	198	1485	95.3	95.8	96.1	0.72	0.82	0.86	185
200	270	1485	96.2	96.5	96.5	0.77	0.85	0.88	358	1490	95.9	96.5	96.7	0.71	0.81	0.86	335
200	270	1490	96.1	96.5	96.6	0.75	0.83	0.86	366	1490	95.7	96.4	96.7	0.69	0.79	0.84	343
220	300	1490	96.2	96.6	96.7	0.75	0.82	0.86	402	1490	95.8	96.5	96.8	0.69	0.78	0.84	376
250	340	1490	96.3	96.6	96.8	0.76	0.84	0.86	456	1490	96.0	96.6	96.9	0.70	0.80	0.84	427
260	350	1490	96.3	96.6	96.8	0.76	0.84	0.86	475	1490	96.0	96.6	96.9	0.70	0.80	0.84	444

W22 - Premium Efficiency
Exceeds IE3 (1)

Output		Frame	Full load torque (Nm)	Locked rotor current Il/In	Locked rotor torque Tl/Tn	Break-down torque Tb/Tn	Inertia J (kgm²)	Allowable locked rotor time (s)		Weight (kg)	Sound dB (A)	400 V							
												Rated speed (rpm)	% of full load						Full load current In (A)
													Efficiency			Power factor			
kW	HP							Hot	Cold				50	75	100	50	75	100	
VI Pole - 1000 rpm - 50 Hz																			
0.12	0.16	63	1.27	3.1	1.8	2.1	0.00066	30	66	7.7	43	905	46.0	53.0	55.0	0.44	0.55	0.64	0.492
0.18	0.25	71	1.91	3.2	2.0	2.1	0.00093	30	66	11.5	43	900	56.0	62.0	62.0	0.40	0.51	0.60	0.698
0.25	0.33	71	2.71	3.2	2.0	2.0	0.00094	30	66	11.5	43	880	60.0	64.0	64.0	0.39	0.51	0.60	0.940
0.37	0.5	80	3.82	4.5	1.9	2.1	0.0025	25	55	12.5	43	925	66.0	69.5	69.5	0.51	0.65	0.75	1.02
0.55	0.75	80	5.68	4.8	2.2	2.2	0.0034	19	42	14.5	43	925	68.0	72.5	73.0	0.50	0.64	0.75	1.45
0.75	1	90S	7.62	5.2	2.5	2.8	0.0066	31	68	22.0	45	940	76.5	79.0	79.0	0.49	0.62	0.71	1.93
1.1	1.5	100L	11.1	4.9	2.0	2.4	0.0110	32	70	28.5	44	945	80.5	81.0	81.0	0.51	0.65	0.73	2.69
1.5	2	100L	15.1	5.5	2.3	2.8	0.0143	31	68	32.0	44	950	81.5	82.5	82.5	0.49	0.62	0.71	3.70
2.2	3	112M	22.1	6.0	2.5	2.6	0.0257	26	57	42.0	48	950	83.0	84.5	84.5	0.53	0.64	0.72	5.22
3	4	132S	29.9	6.4	2.0	2.3	0.0453	28	62	61.0	52	960	85.0	85.8	85.8	0.52	0.65	0.73	6.91
4	5.5	132M	39.8	6.5	2.2	2.5	0.0566	30	66	66.0	52	960	86.0	86.8	86.8	0.53	0.66	0.74	8.99
5.5	7.5	132M/L	54.5	7.0	2.5	2.8	0.0755	26	57	80.0	52	965	86.5	88.0	88.0	0.50	0.64	0.72	12.5
7.5	10	160M	73.5	6.5	2.3	2.9	0.1436	20	44	122	56	975	89.3	90.3	90.7	0.63	0.74	0.81	14.7
9.2	12.5	160L	90.2	6.5	2.3	2.9	0.1652	18	40	137	56	975	90.0	90.6	91.0	0.64	0.75	0.81	18.0
11	15	160L	108	6.5	2.4	3.0	0.1760	16	35	143	56	975	90.0	90.8	91.2	0.62	0.74	0.81	21.5
15	20	180L	147	7.7	2.6	3.2	0.2896	10	22	193	56	975	91.3	91.7	92.0	0.65	0.78	0.84	28.0
18.5	25	200L	180	6.2	2.2	2.8	0.3767	19	42	223	60	980	91.7	92.3	92.5	0.65	0.76	0.82	35.2
22	30	200L	215	6.3	2.3	2.9	0.4485	18	40	240	60	980	92.0	92.6	92.9	0.65	0.76	0.82	41.7
30	40	225S/M	291	7.4	2.3	2.8	0.9884	17	37	401	61	985	93.7	94.0	94.0	0.70	0.80	0.85	54.2
37	50	250S/M	359	7.4	2.3	2.7	1.32	17	37	486	61	985	94.0	94.4	94.4	0.72	0.81	0.85	66.6
45	60	280S/M	434	6.8	2.2	2.7	2.30	32	70	678	65	990	94.1	94.8	95.0	0.65	0.76	0.82	83.4
55	75	280S/M	531	6.7	2.2	2.7	2.64	28	62	723	65	990	94.5	95.0	95.3	0.67	0.77	0.82	102
75	100	315S/M	724	6.7	2.2	2.6	3.45	32	70	962	67	990	95.0	95.6	95.8	0.67	0.78	0.83	136
90	125	315S/M	869	6.7	2.2	2.5	4.02	34	75	1048	67	990	95.3	95.8	96.1	0.67	0.78	0.83	163
110	150	315S/M	1060	6.8	2.4	2.6	9.28	32	70	1106	67	990	95.5	96.0	96.2	0.67	0.78	0.83	199
132	175	315S/M	1270	7.2	2.5	2.7	10.4	26	57	1190	67	990	95.6	96.1	96.3	0.67	0.77	0.82	241
150	200	315L	1450	7.1	2.5	2.8	11.1	25	55	1365	68	990	95.7	96.1	96.3	0.67	0.78	0.83	271
160	220	315L	1540	7.4	2.6	2.7	11.1	24	53	1448	68	990	95.7	96.2	96.4	0.67	0.78	0.83	289
185	250	355M/L	1790	6.6	2.2	2.4	11.6	34	75	1666	73	990	95.7	96.2	96.4	0.64	0.74	0.79	351
200	270	355M/L	1920	6.5	2.1	2.3	11.6	40	88	1739	73	995	95.7	96.3	96.5	0.64	0.75	0.80	374
220	300	355M/L	2110	6.5	2.2	2.3	13.5	36	79	1854	73	995	95.7	96.3	96.5	0.64	0.75	0.80	411
250	340	355M/L	2400	6.5	2.3	2.4	14.4	38	84	1970	73	995	95.8	96.4	96.6	0.64	0.75	0.80	467
260	350	355M/L	2500	6.5	2.3	2.4	14.4	38	84	1970	73	995	95.8	96.4	96.6	0.64	0.75	0.80	486
280	380	355M/L	2690	5.5	2.0	2.4	14.4	38	84	1970	73	995	95.0	96.0	96.2	0.64	0.75	0.80	525
Optional Frames																			
1.5	2	112M	15.1	5.6	2.1	2.6	0.0202	27	59	39.0	48	950	82.0	82.7	82.7	0.54	0.65	0.73	3.59
3	4	132M	29.9	6.4	2.0	2.3	0.0453	28	62	61.0	52	960	85.0	85.8	85.8	0.52	0.65	0.73	6.91
75	100	280S/M	724	8.0	3.0	3.5	3.45	8	18	725	65	990	94.8	95.3	95.5	0.63	0.75	0.80	142
150	200	315S/M	1450	7.1	2.5	2.8	11.1	25	55	1365	67	990	95.7	96.1	96.3	0.67	0.78	0.83	271
160	220	355M/L	1540	6.5	2.1	2.3	11.1	33	73	1594	73	990	95.5	96.2	96.4	0.63	0.74	0.79	303

Notes:
(1) Efficiency values are given according to IEC 60034-2-1. They are calculated according to indirect method, with stray load losses determined by measurement.

W22 - Premium Efficiency
Exceeds IE3 (1)

Output		380 V								415 V							
		Rated speed	% of full load						Full load current	Rated speed	% of full load						Full load current
			Efficiency			Power Factor					Efficiency			Power Factor			
kW	HP	(rpm)	50	75	100	50	75	100	In (A)	(rpm)	50	75	100	50	75	100	In (A)
VI Pole - 1000 rpm - 50 Hz																	
0.12	0.16	890	48.7	54.7	55.1	0.47	0.58	0.68	0.487	910	43.9	51.4	54.2	0.42	0.52	0.61	0.505
0.18	0.25	885	57.7	62.8	61.6	0.43	0.55	0.64	0.694	910	54.5	61.2	61.9	0.38	0.48	0.57	0.710
0.25	0.33	865	62.4	65.2	63.6	0.42	0.55	0.64	0.933	890	57.6	62.8	63.8	0.37	0.48	0.57	0.956
0.37	0.5	915	67.6	69.9	68.6	0.55	0.69	0.79	1.04	930	64.3	68.8	69.7	0.48	0.62	0.72	1.03
0.55	0.75	915	69.9	73.0	72.2	0.54	0.69	0.78	1.48	930	66.0	71.6	73.1	0.47	0.61	0.71	1.47
0.75	1	930	77.5	79.2	78.3	0.53	0.66	0.74	1.97	945	75.3	78.6	79.1	0.46	0.59	0.69	1.91
1.1	1.5	940	81.2	80.9	80.1	0.55	0.68	0.75	2.78	950	79.9	80.9	81.5	0.48	0.62	0.70	2.68
1.5	2	945	82.3	82.6	81.9	0.53	0.66	0.74	3.76	955	80.6	82.3	82.8	0.46	0.59	0.68	3.71
2.2	3	945	83.6	84.4	83.8	0.57	0.68	0.75	5.32	955	82.3	84.3	84.7	0.50	0.62	0.70	5.16
3	4	955	85.6	85.9	85.3	0.56	0.69	0.76	7.03	965	84.3	85.6	85.9	0.49	0.62	0.71	6.84
4	5.5	955	86.6	86.9	86.3	0.57	0.70	0.76	9.27	965	85.4	86.6	86.9	0.50	0.63	0.71	9.02
5.5	7.5	960	87.4	88.3	87.8	0.55	0.68	0.75	12.7	965	85.8	87.7	88.0	0.47	0.61	0.69	12.6
7.5	10	970	89.8	90.3	90.4	0.67	0.77	0.83	15.2	975	88.8	90.2	90.8	0.60	0.71	0.79	14.5
9.2	12.5	970	90.4	90.6	90.6	0.68	0.78	0.83	18.6	975	89.6	90.5	91.2	0.61	0.73	0.79	17.8
11	15	970	90.5	90.8	90.8	0.66	0.77	0.83	22.2	975	89.5	90.7	91.3	0.59	0.71	0.79	21.2
15	20	970	91.5	91.5	91.5	0.68	0.80	0.85	29.3	975	91.6	92.0	92.3	0.69	0.80	0.85	26.6
18.5	25	980	92.2	92.4	92.2	0.69	0.79	0.84	36.3	980	91.2	92.1	92.6	0.61	0.73	0.80	34.7
22	30	980	92.5	92.7	92.7	0.69	0.79	0.84	42.9	980	91.4	92.4	92.9	0.61	0.73	0.80	41.2
30	40	980	93.8	93.8	93.6	0.73	0.82	0.86	56.6	985	93.5	94.0	94.2	0.67	0.78	0.84	52.7
37	50	980	93.8	94.0	93.8	0.74	0.82	0.86	69.7	985	93.8	94.4	94.6	0.69	0.79	0.84	64.8
45	60	990	94.2	94.7	94.7	0.69	0.78	0.84	85.9	990	93.9	94.8	95.1	0.62	0.74	0.81	81.3
55	75	985	94.6	94.9	95.0	0.70	0.79	0.83	106	990	94.3	95.0	95.4	0.64	0.75	0.81	99.0
75	100	990	95.2	95.6	95.6	0.71	0.80	0.84	142	990	94.8	95.6	95.9	0.64	0.76	0.82	133
90	125	990	95.4	95.8	95.9	0.71	0.80	0.84	170	990	95.2	95.8	96.2	0.64	0.76	0.82	159
110	150	990	95.6	96.0	96.0	0.71	0.80	0.84	207	990	95.3	96.0	96.3	0.64	0.76	0.82	194
132	175	990	95.8	96.1	96.1	0.71	0.80	0.84	248	990	95.4	96.0	96.3	0.64	0.75	0.81	235
150	200	990	95.8	96.1	96.1	0.70	0.80	0.84	282	990	95.5	96.1	96.4	0.64	0.76	0.82	264
160	220	990	95.9	96.2	96.2	0.71	0.80	0.84	301	990	95.5	96.1	96.4	0.64	0.76	0.82	282
185	250	990	96.0	96.3	96.3	0.68	0.77	0.81	360	990	95.5	96.1	96.4	0.61	0.72	0.77	347
200	270	995	95.9	96.4	96.4	0.68	0.78	0.82	384	995	95.5	96.2	96.5	0.61	0.73	0.79	365
220	300	995	95.9	96.3	96.4	0.68	0.78	0.82	423	995	95.5	96.2	96.5	0.61	0.73	0.79	401
250	340	995	96.0	96.4	96.5	0.68	0.78	0.82	480	995	95.6	96.3	96.6	0.61	0.73	0.79	456
260	350	995	96.0	96.4	96.5	0.68	0.78	0.82	499	995	95.6	96.3	96.6	0.61	0.73	0.79	474
280	380	995	95.3	96.1	96.3	0.68	0.78	0.82	539	995	94.8	96.0	96.4	0.61	0.73	0.78	518
Optional Frames																	
1.5	2	945	82.5	82.6	81.9	0.57	0.69	0.75	3.71	955	81.4	82.7	83.1	0.51	0.63	0.71	3.54
3	4	955	85.6	85.9	85.3	0.56	0.69	0.76	7.03	965	84.3	85.6	85.9	0.49	0.62	0.71	6.84
75	100	985	95.3	95.6	95.5	0.66	0.77	0.82	146	990	94.6	95.3	95.6	0.59	0.71	0.77	142
150	200	990	95.8	96.1	96.1	0.70	0.80	0.84	282	990	95.5	96.1	96.4	0.64	0.76	0.82	264
160	220	995	95.2	95.8	96.1	0.67	0.77	0.82	308	995	94.7	95.7	96.3	0.60	0.72	0.79	293

W22 - Premium Efficiency

Output		Frame	Full load torque (Nm)	Locked rotor current Il/In	Locked rotor torque Tl/Tn	Break-down torque Tb/Tn	Inertia J (kgm²)	Allowable locked rotor time (s)		Weight (kg)	Sound dB (A)	400 V							
												Rated speed (rpm)	% of full load						Full load current In (A)
													Efficiency			Power factor			
kW	HP							Hot	Cold				50	75	100	50	75	100	
VIII pole - 750 rpm - 50 Hz																			
0.12	0.16	71	1.76	2.4	1.8	2.0	0.00094	30	66	11.5	41	650	44.0	50.0	52.5	0.35	0.43	0.50	0.660
0.18	0.25	80	2.53	3.3	2.0	2.2	0.0029	30	66	13.5	42	680	51.0	57.0	58.5	0.45	0.55	0.65	0.683
0.25	0.33	80	3.51	3.3	2.0	2.2	0.0034	30	66	14.5	42	680	53.0	58.0	60.0	0.45	0.56	0.66	0.911
0.37	0.5	90S	5.12	3.7	2.1	2.4	0.0055	30	66	19.0	43	690	61.0	66.0	66.0	0.41	0.53	0.62	1.31
0.55	0.75	90L	7.67	3.6	1.8	2.1	0.0066	29	64	23.0	43	685	63.0	66.5	66.5	0.44	0.57	0.67	1.78
0.75	1	100L	10.1	4.6	1.9	2.3	0.0127	30	66	30.5	50	710	72.5	75.5	75.5	0.41	0.53	0.62	2.31
1.1	1.5	100L	14.9	4.6	2.1	2.4	0.0143	30	66	33.0	50	705	73.0	76.0	76.0	0.41	0.53	0.62	3.37
1.5	2	112M	20.3	5.0	2.5	2.8	0.0238	28	62	43.0	46	705	79.0	80.5	80.5	0.45	0.59	0.68	3.96
2.2	3	132S	29.6	6.2	2.3	2.5	0.0690	27	59	69.0	48	710	82.0	82.6	82.6	0.51	0.65	0.72	5.34
3	4	132M	40.4	6.4	2.4	2.6	0.0838	21	46	75.0	48	710	82.5	83.5	83.5	0.51	0.64	0.72	7.20
4	5.5	160M	52.7	5.0	2.1	2.3	0.1221	34	75	114	51	725	85.0	86.8	86.6	0.52	0.65	0.72	9.26
5.5	7.5	160M	72.5	5.0	2.1	2.3	0.1652	28	62	123	51	725	86.0	87.3	87.7	0.52	0.65	0.73	12.4
7.5	10	160L	98.8	5.3	2.2	2.5	0.1652	22	48	145	51	725	87.0	88.3	88.9	0.52	0.65	0.73	16.7
9.2	12.5	180M	121	6.0	2.0	2.6	0.2620	15	33	173	51	725	89.0	89.3	89.6	0.63	0.75	0.82	18.1
11	15	180L	145	6.5	2.3	2.7	0.2620	12	26	185	51	725	89.5	90.0	90.3	0.55	0.68	0.76	23.1
15	20	200L	196	4.9	1.9	2.1	0.5023	34	75	235	56	730	90.0	91.0	91.4	0.56	0.68	0.74	32.0
18.5	25	225S/M	241	6.5	1.7	2.5	0.8472	28	62	377	56	735	93.0	93.0	92.7	0.63	0.75	0.81	35.6
22	30	225S/M	286	6.5	1.8	2.5	0.9884	22	48	402	56	735	93.0	93.1	93.0	0.63	0.75	0.81	42.2
30	40	250S/M	390	7.4	1.9	2.8	1.22	18	40	490	56	735	93.3	93.3	93.2	0.66	0.77	0.83	56.0
37	50	280S/M	478	6.0	1.8	2.3	2.64	32	70	673	59	740	93.7	94.2	94.2	0.63	0.73	0.79	71.8
45	60	280S/M	581	6.0	1.8	2.2	3.10	30	66	741	59	740	94.0	94.5	94.5	0.63	0.73	0.79	87.0
55	75	315S/M	710	6.0	1.7	2.2	3.45	40	88	936	62	740	94.3	94.8	94.8	0.65	0.75	0.80	105
75	100	315S/M	968	6.0	1.8	2.2	4.37	40	88	1049	62	740	94.6	95.1	95.1	0.65	0.75	0.80	142
90	125	315S/M	1160	6.0	1.9	2.2	5.29	40	88	1149	62	740	94.9	95.2	95.3	0.65	0.75	0.80	170
110	150	315L	1420	6.0	1.9	2.2	12.6	35	77	1367	68	740	95.0	95.4	95.4	0.64	0.74	0.79	211
132	175	315L	1700	6.0	2.0	2.3	13.2	34	75	1508	68	740	95.3	95.7	95.7	0.64	0.74	0.79	252
160	220	355M/L	2050	6.4	1.3	2.3	16.3	56	123	1747	70	745	95.4	95.8	96.0	0.64	0.75	0.80	301
185	250	355M/L	2370	6.3	1.3	2.3	17.3	56	123	1819	70	745	95.5	95.9	96.0	0.64	0.75	0.80	348
200	270	355M/L	2570	6.2	1.3	2.3	19.5	56	123	1891	70	745	95.6	96.1	96.1	0.65	0.76	0.80	375
Optional Frames																			
110	150	355M/L	1410	6.2	1.3	2.3	12.6	56	123	1484	70	745	95.1	95.4	95.4	0.62	0.74	0.79	211
132	175	355M/L	1690	6.2	1.3	2.3	13.2	48	106	1587	70	745	95.3	95.7	95.7	0.64	0.74	0.79	252

Notes:
(1) Efficiency values are given according to IEC 60034-2-1. They are calculated according to indirect method, with stray load losses determined by measurement.

W22 - Premium Efficiency

Output		380 V								415 V							
		Rated speed	% of full load						Full load current	Rated speed	% of full load						Full load current
			Efficiency			Power Factor					Efficiency			Power Factor			
kW	HP	(rpm)	50	75	100	50	75	100	In (A)	(rpm)	50	75	100	50	75	100	In (A)
VIII pole - 750 rpm - 50 Hz																	
0.12	0.16	635	46.6	51.7	52.9	0.38	0.46	0.54	0.638	655	41.8	48.2	51.4	0.34	0.41	0.48	0.677
0.18	0.25	670	52.8	58.0	58.4	0.48	0.59	0.69	0.679	685	49.3	56.0	58.2	0.43	0.53	0.62	0.694
0.25	0.33	670	54.9	58.9	59.7	0.48	0.60	0.70	0.909	685	51.3	56.9	59.7	0.43	0.53	0.63	0.925
0.37	0.5	680	62.9	66.9	65.8	0.44	0.56	0.66	1.29	695	59.0	64.7	65.7	0.39	0.50	0.59	1.33
0.55	0.75	675	64.8	67.0	65.7	0.48	0.61	0.70	1.82	690	61.4	65.7	66.6	0.42	0.54	0.64	1.80
0.75	1	705	73.9	76.1	75.1	0.44	0.57	0.66	2.30	715	71.1	74.8	75.5	0.38	0.50	0.59	2.34
1.1	1.5	700	74.9	76.8	75.8	0.45	0.58	0.66	3.34	710	71.1	74.9	75.7	0.38	0.50	0.59	3.43
1.5	2	700	79.9	80.6	79.8	0.49	0.63	0.71	4.02	710	77.9	80.2	80.8	0.42	0.56	0.65	3.97
2.2	3	705	82.9	82.6	81.9	0.57	0.68	0.76	5.37	715	81.2	82.3	82.9	0.48	0.62	0.70	5.27
3	4	705	83.4	83.7	82.9	0.56	0.68	0.75	7.33	715	81.5	83.2	83.7	0.48	0.61	0.70	7.12
4	5.5	720	85.6	86.8	86.1	0.56	0.68	0.74	9.54	730	94.4	96.6	96.8	0.49	0.62	0.70	8.21
5.5	7.5	720	86.7	87.3	87.2	0.56	0.68	0.76	12.6	730	85.2	87.0	87.8	0.49	0.62	0.71	12.3
7.5	10	720	87.8	88.5	88.6	0.56	0.69	0.76	16.9	725	86.2	88.0	88.9	0.49	0.62	0.71	16.5
9.2	12.5	720	89.2	89.1	88.9	0.67	0.78	0.84	18.7	730	88.6	89.3	90.0	0.60	0.73	0.80	17.8
11	15	720	90.0	90.0	89.8	0.59	0.71	0.77	24.2	725	89.0	89.9	90.5	0.52	0.65	0.74	22.9
15	20	730	90.5	91.0	91.0	0.60	0.71	0.76	33.0	730	89.4	90.8	91.5	0.53	0.65	0.72	31.7
18.5	25	730	93.1	92.8	92.2	0.67	0.78	0.83	36.7	735	92.8	93.0	92.9	0.60	0.73	0.80	34.6
22	30	730	93.1	92.9	92.5	0.67	0.78	0.83	43.5	735	92.8	93.1	93.2	0.60	0.73	0.79	41.6
30	40	730	93.4	93.1	92.7	0.70	0.80	0.85	57.8	735	93.1	93.3	93.4	0.63	0.75	0.85	52.6
37	50	740	93.9	94.1	93.9	0.67	0.76	0.81	73.9	740	93.4	94.1	94.3	0.60	0.71	0.77	70.9
45	60	740	94.1	94.4	94.1	0.67	0.76	0.80	90.8	740	93.8	94.5	94.7	0.60	0.71	0.78	84.8
55	75	740	94.5	94.7	94.5	0.69	0.77	0.81	109	740	94.0	94.7	94.9	0.62	0.73	0.79	102
75	100	740	94.7	95.0	94.8	0.69	0.77	0.81	148	740	94.4	95.1	95.2	0.62	0.73	0.79	139
90	125	740	95.1	95.1	95.0	0.69	0.77	0.81	178	740	94.7	95.1	95.4	0.62	0.73	0.79	166
110	150	740	95.2	95.3	95.1	0.68	0.77	0.81	217	740	94.8	95.3	95.5	0.61	0.72	0.78	205
132	175	740	95.5	95.6	95.4	0.68	0.77	0.81	260	740	95.1	95.6	95.8	0.61	0.72	0.78	246
160	220	745	95.6	95.8	95.9	0.68	0.78	0.82	309	745	95.1	95.7	96.0	0.61	0.73	0.78	297
185	250	745	95.8	96.0	95.9	0.68	0.78	0.82	357	745	95.2	95.7	96.0	0.60	0.72	0.78	344
200	270	745	95.8	96.1	96.0	0.69	0.79	0.82	386	745	95.3	96.0	96.1	0.61	0.73	0.78	371
Optional Frames																	
110	150	740	94.0	95.2	95.1	0.65	0.76	0.81	217	745	93.0	95.2	95.2	0.59	0.77	0.77	209
132	175	740	94.5	95.4	95.3	0.66	0.75	0.81	260	745	93.5	95.4	95.4	0.60	0.71	0.77	250

17. Mechanical data

Foot mounted motors

Frames 63 to 112

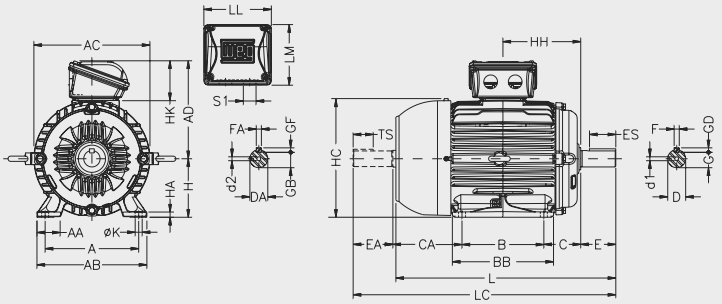

Frames 132 to 200

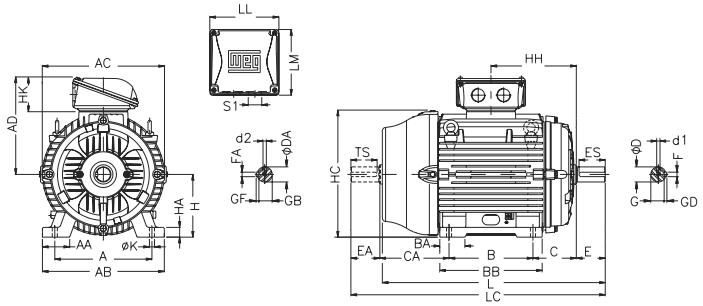

Frames 225 to 355M/L

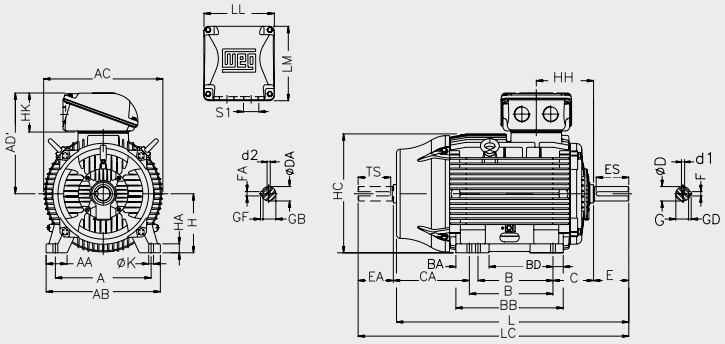

Frame 355M/L (only for motors fitted with air deflector in the drive end side)

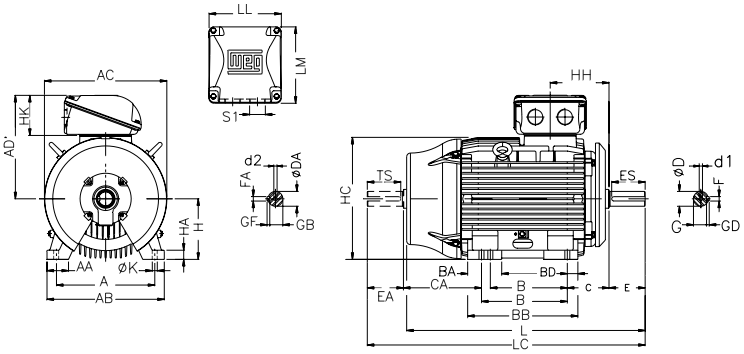

Frame 355A/B

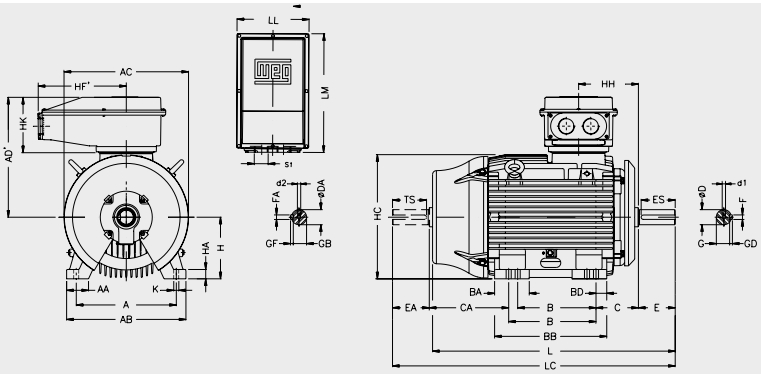

Frame	A	AA	AB	AC	AD (**)	AD'	B	BA	BB	BD	C	CA	Shaft											
													D	DA	E	EA	ES	F	FA	G	GB	GD	GF	TS
63	100	25.5	116	125	122	122	80	-	95	-	40	78	11j6	9j6	23	20	14	4	3	8.5	7.2	4	3	12
71	112	28.5	132	141	130	130	90		113.5		45	88	14j6	11j6	30	23	18	5	4	11	8.5	5	4	14
80	125	30.5	149	159	139	139	100		125.5		50	93	19j6	14j6	40	30	28	6	5	15.5	11	6	5	18
L80																								
90S	140	36.5	164	179	157	157			131		56	104	24j6	16j6	50	40	36	8		20	13	7		28
L90S																								
90L							125		156															
L90L																								
100L	160	40	188	199	167	167	140		173		63	118	28j6	22j6	60	50	45		6	24	18.5		6	36
L100L																								
112M	190	40.5	220	222	192	192			177		70	128		24j6					8		20		7	
L112M																								
132S	216	51	248	271	218	218		55	187		89	150	38k6	28j6	80	60	63	10		33	24	8		45
132M							178		225															
132M/L																								
160M	254	64	308	329	264	264	210	63	254		108	174	42k6	42k6	110	110	80	12	12	37	37		8	80
160L							254		298															
180M	279	78	350	360	279	279	241	70	294		121	200	48k6	48k6				14	14	42.5	42.5	9	9	
180L							279		332															
200M	318	82	385	402	317	317	267	82	332		133	222	55m6					16		49		10		
200L							305		370															
225S/M	356	80	436	455	408	384	286/311	124	412	41	149	319/294	55m6*	55m6*	110*	110*	100*	16*	16*	49*	49*	10*	10*	100*
													60m6	60m6	140	140	125	18	18	53	53	11	11	125
250S/M	406	100	506	486		402	311/349	146	467	59	168	354/316	60m6*	60m6*	140*	140*	125*	18*	18*	53*	53*	11*	11*	125*
													65m6	60m6	140	140	125	18	18	58	53	11	11	125
280S/M	457		557	599	442	472	368/419	151	517	49	190	385/334	65m6*	60m6*	140*	140*	125*	18*	18*	58*	53*	11*	11*	125*
													75m6	65m6	140	140	125	20	18	67.5	58	12	11	125
315S/M	508	120	630	657	525	530	406/457	184	621	70	216	494/443	65m6*	60m6*	140*	140*	125*	18*	18*	58*	53*	11*	11*	125*
													80m6	65m6	170	140	160	22	18	71	58	14	14	125
315L					589	575	508	219	752	81		497	65m6*	60m6*	140*	140*	125*	18*	18*	58*	53*	11*	11*	125*
													80m6	65m6	170	140	160	22	18	71	58	14	14	125
355M/L	610	140	750	736	609	625	560/630	230	760	65	254	483/413	75m6*	60m6*	140*	140*	125*	20*	18*	67.5*	53*	12*	11*	125*
													100m6	80m6	210	170	200	28	22	90	71	16	14	160
355A/B					701	755	710/800	325	955	70		528/438	75m6*	60m6*	140*	140*	125*	20*	18*	67.5*	53*	12*	11*	125*
													100m6	80m6	210	170	200	28	22	90	71	16	14	160

Frame	H	HA	HB (**)	HC	HD(**)	HF (**)	HG (**)	HH	HK	K	L	LC	LL	LM	S1	d1	d2	Bearings	
																		D.E.	N.D.E.
63	63	7	25.5	129	-	68.5	-	80	59	7	216	241	108	98	2xM20x1.5	M4	M3	6201 - ZZ	
71	71		33	145		76		90			248	276				M5	M4	6202 - ZZ	
80	80	8	43.5	163		87		100		10	276	313				M6		6204 - ZZ	6203 - ZZ
L80											325	362							
90S	90	9	45	182		90		106	67		304	350	115	104	2xM25x1.5	M8	M6	6205 - ZZ	6204 - ZZ
L90S											335	381							
90L								118.5			329	375							
L90L											360	406							
100L	100	10	61.5	205	244	106.4		133		12	376	431				M10	M8	6206 - ZZ	6205 - ZZ
L100L											420	475							
112M	112		54.5	235	280	112		140	79		393	448	140	133	2xM32x1.5			6207 - ZZ	6206 - ZZ
L112M											423	478							
132S	132	20	75	266	319	132		159			452	519				M12	M10	6308 - ZZ	6207 - ZZ
132M								178			490	557							
132M/L								191			515	582							
160M	160	22	79	327	374	168		213	100	14.5	598	712	198	188	2xM40x1.5	M16	M16	6309 - C3	6209 - Z-C3
160L								235			642	756							
180M	180	28	92	363	413	180		241.5			664	782						6311 - C3	6211- Z-C3
180L								260.5			702	820							
200M	200	30	119	405	464	218		266.5	118	18.5	729	842	228	217	2xM50x1.5	M20	M20	6312 C3	6212 Z-C3
200L								285.5			767	880							
225S/M	225	34	255	453	550	403	523	212	143		856*	974*	261	292				6314 - C3	
											886	1034							
250S/M	250	43	290	493	583	449	566	214		24	965	1113			2xM63x1.5				
280S/M	280	42	383	580	696	550	667	266	145		1071	1223	314	312				6316 - C3	
315S/M	315	48	386	664	768	615	744	264	177	28	1244*	1392*	372	382				6314 - C3	
											1274	1426						6319 - C3	6316 - C3
315L			336		774	575	760	284	215		1353*	1501*	404	438				6314 - C3	
											1383	1535						6319 - C3	6316 - C3
355M/L	355	50	426	723	863	665	847	340			1412*	1577*						6316 - C3	6314 - C3
											1482	1677				M24		6322 - C3	6319 - C3
355A/B			154		885				318**		1607*	1772*	443	730		M20*		6316 - C3	6314 - C3
									355		1677	1872				M24		6322 - C3	6319 - C3

Notes:
(*) Dimension applicable to 2 pole motors
(**) Dimension is applicable to right or left terminal box mounting

Flange mounted motors

"FF" Flange

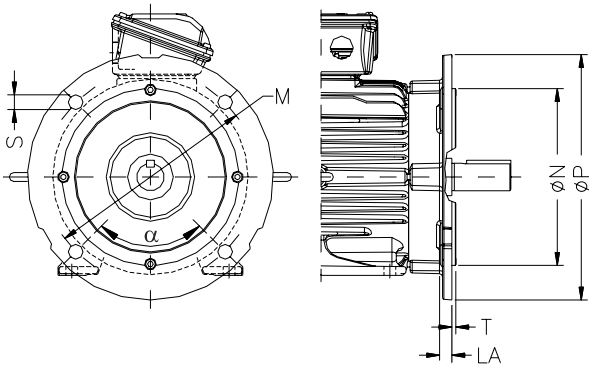

Flange "FF"									
Frame	Flange	LA	M	N	P	S	T	α	N° of holes
63	FF-115	9	115	95	140	10	3	45°	4
71	FF-130		130	110	160		3,5		
80	FF-165	10	165	130	200	12			
90									
100	FF-215	11	215	180	250	15	4		
112									
132	FF-265	12	265	230	300				
160	FF-300	18	300	250	350	19	5		
180									
200	FF-350		350	300	400				
225	FF-400	18	400	350	450	19	5	22°30'	8
250	FF-500		500	450	550				
280									
315	FF-600	22	600	550	660	24	6		
355	FF-740		740	680	800				

"C-DIN" Flange

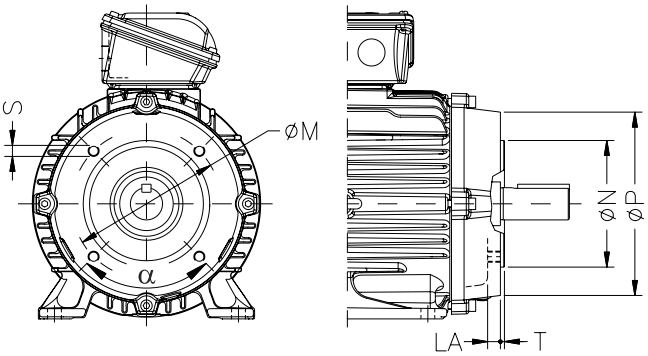

Frame	Flange	LA	M	N	P	S	T	α	N° of holes
63	C-90	9.5	75	60	90	M5	2.5	45°	4
71	C-105	8	85	70	105	M6			
80	C-120	10.5	100	80	120		3		
90	C-140	12	115	95	140	M8			
100	C-160	13.5	130	110	160		3.5		
112									
132	C-200	15.5	165	130	200	M10			

“NEMA C” Flange

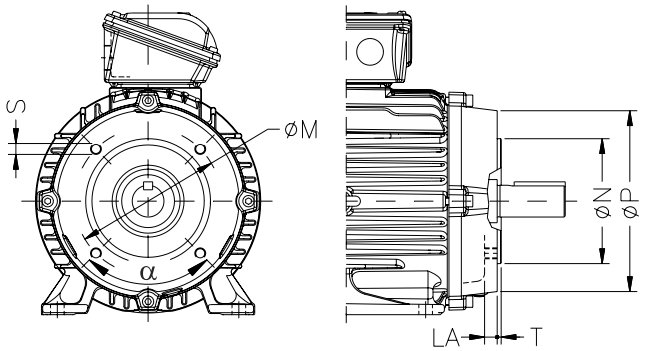

Flange “C”									
Frame	Flange	LA	M	N	P	S	T	α	Nº of holes
63	FC-95	8.5	95.2	76.2	143	UNC 1/4”x20	4	45°	4
71		10							
80									
90	FC-149	15	149.2	114.3	165	UNC 3/8”x16			
100		12							
112	FC-184	13.5	184.2	215.9	225	UNC 1/2”x13	6.3		
132		9							
160		19.5							
180	FC-228	13.5	228.6	266.7	280				
200									
225	FC-279	18.5	279.4	317.5	395	UNC 5/8”x11	6.3	22°30’	8
250	FC-355		355.6	406.4	455				
280									
315	FC-368		368.3	419.1					
355		33.5							

18. Terminal box drawings

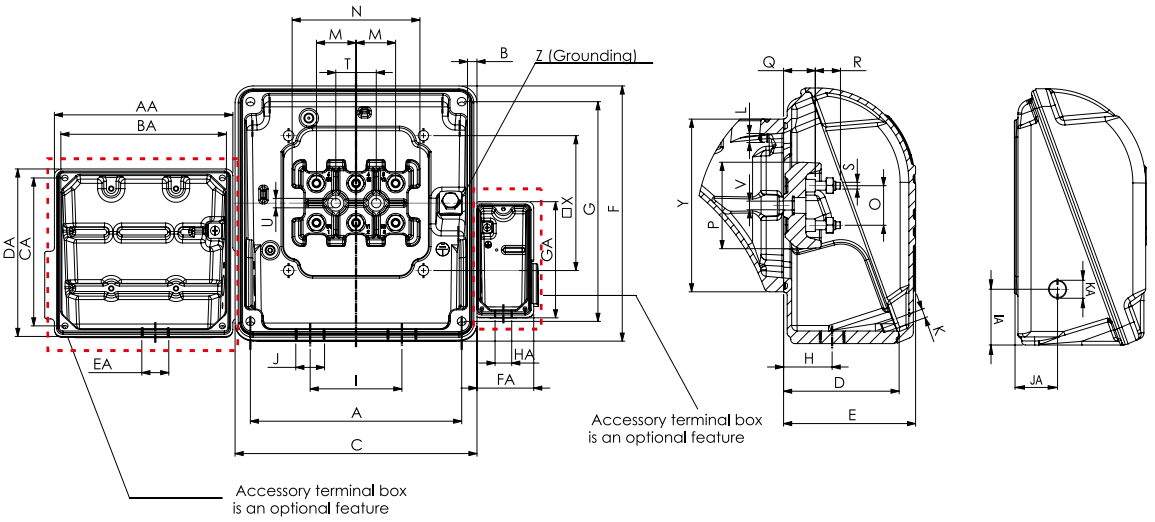

Frame	A	B	C	D	E	F	G	H	I	J	K	L	M	N	O	P	Q	R	S	T	U
63	90	3.5	108.5	51.5	59	96	85	27	42	2xM20x1.5	M5x0.8	M5x0.8	16	75	16	35	13.5	12	M4x0.7	20	5.8
71																					
80																					
90	98	3	114.5	59.5	67	101	91	31		2xM25x1.5											
100																					
112	117	2.5	138	71	80	130.5	117	36.5	54	2xM32x1.5	M6x1.0	M6x1.0	23	55	23	52	17	16	M5x0.8	23	6.5
132																					
160	175	4	198	90	100.5	187.5	175	49	84	2xM40x1.5	M8x1.25	M8x1.25	28	90	28	60	21.5	20.5	M6x1	28	6.6
180																					
200	204	4.5	228	107	118	216	204	59	94	2xM50x1.5			35	112	35	74	24	24	M8x1.25	35	9.5
225S/M	235	12.5	269	133	153	301	260	71	110		M10x1.5	M10x1.5	44	140	44	94	28	28	M10x1.5	45	10.5
250S/M																					
280S/M	275	13.5	314			311	275		126	2xM63x1.5	M12x1.75	M12x1.75	45	153	45	108	34	40	M12x1.75		
315S/M	340	14.5	379	162	182	390	345	78	160												
315L	365		404	202	226	422	390	97	200			M14x2.0	65	210	65	146	48	48	M16x2.0	65	
355M/L																					
355A/B**	415	-	442	267 232*	355 318*	729	678	187 152*	140		M10x1.5	M12x1.75	80	-	105	-	-	-	M20x2.5	-	-

Frame	V	X	Y	Z	AA	BA	CA	DA	EA	FA	GA	HA	IA	JA	KA	Max number of connectors		
																Main	Accessories	Space Heater
63	M5x0.8	56	77	0.5-6 mm²	109	90	85	98	M20x1.5	-	-	-	-	-	-	4	16	-
71			78															
80			81															
90			77															
100			81															
112		70	107	2-10 mm²												6		
132			103							68	131	M20x1.5						4
160	M6x1.0	110	140	5.2-25 mm²	139	117	117	133					47	40	M20x1.5	12	26	
180																		
200	M8x1.25	120	155	5.2-35 mm²									47	45				
225S/M	M10x1.5	150	192	25-50 mm²	198	175	175	189					62	48		16		
250S/M			197															
280S/M			204	35-70 mm²									77	56				
315S/M		200	260										82	69				
315L		260		85-120 mm²									97	79				
355M/L			300															
355A/B**	-	290											-	-	-	-		

Notes:
** Dimension applicable to 2 pole motors.*
*** Oversized terminal box*

19. Drip cover data

Utilization of a rain drip cover increases the total length of the motor. The additional land length can be seen an the tabel bellow.

Figure 35 – Motor with drip cover

Frame	Dimension CH [increase motor length (mm)]
63	18
71	
80	
90	
100	28
112	31
132	
160	47
180	57
200	67
225S/M	81
250S/M	
280S/M	91
315S/M	
315L	
355M/L	
355A/B	

20. Packaging

W22 motors in frames 63 to 132 are packaged in cardboard boxes (see figure 36), following the dimensions, weights and volumes opposite:

Figure 36: Cardboard box

Top mounted terminal box

Frame	External height (m)	External width (m)	External length (m)	Weight (kg)	Volume (m³)
63	0.26	0.21	0.30	0.2	0.02
71	0.26	0.21	0.30	0.2	0.02
80	0.27	0.26	0.36	0.7	0.02
90	0.32	0.27	0.43	0.9	0.04
100	0.33	0.27	0.46	1.4	0.04
112M	0.36	0.30	0.46	1.5	0.05
132	0.42	0.33	0.60	1.7	0.08

Side mounted terminal box

Frame	External height (m)	External width (m)	External length (m)	Weight (kg)	Volume (m³)
63	19.5	23.5	28	0.2	0.01
71	19.5	27.5	30	0.2	0.01
80	21	28	36	0.7	0.02
L80	23.5	31.5	39.8	0.8	0.03
90	23.5	31.5	39.8	0.8	0.03
100L	26.5	35	45.5	1.6	0.04
L100L	31.5	36.5	49.5	1.4	0.06
112M	31	38	45.5	1.7	0.05
132	35	48	59.5	2.1	0.10

Note: Values to be added to the net motor weight

For frames 160 to 355A/B, the motors are packaged in wooden crates (see figure 37). Dimensions, weights and volumes are in tables opposite.

Figure 37: Wooden crates

Top mounted terminal box

Frame	External height (m)	External width (m)	External length (m)	Weight (kg)	Volume (m³)
160	40.2	51.2	74	9.8	0.15
180	45.2	57.2	82	13.4	0.21
200	49.2	63.2	88	14.6	0.27
225S/M	78	85	115	47.7	0.76
250S/M	90	85	125	52.2	0.96
280S/M	95	95	140	71.6	1.26
315S/M	113	110	175	88.4	2.18
315L	110.3	112.2	170	138	2.10
355M/L	120	119	172	146	2.46
355A/B	120	119	190	163	2.71

Side mounted terminal box

Frame	External height (m)	External width (m)	External length (m)	Weight (kg)	Volume (m³)
160	0.50	0.40	0.74	9.2	0.15
180	0.53	0.43	0.82	12.3	0.19
200	0.59	0.51	0.88	13.5	0.27
225S/M	0.90	0.85	1.15	51.9	0.88
250S/M	0.90	0.85	1.25	54.6	0.96
280S/M	1.13	0.85	1.40	67.9	1.34
315S/M	1.13	0.85	1.55	69.9	1.49
315L	1.20	0.90	1.70	111	1.84
355M/L	1.32	1.05	1.73	127	2.40
355A/B	1.32	1.05	1.90	141	2.63

Note: Values to be added to the net motor weight

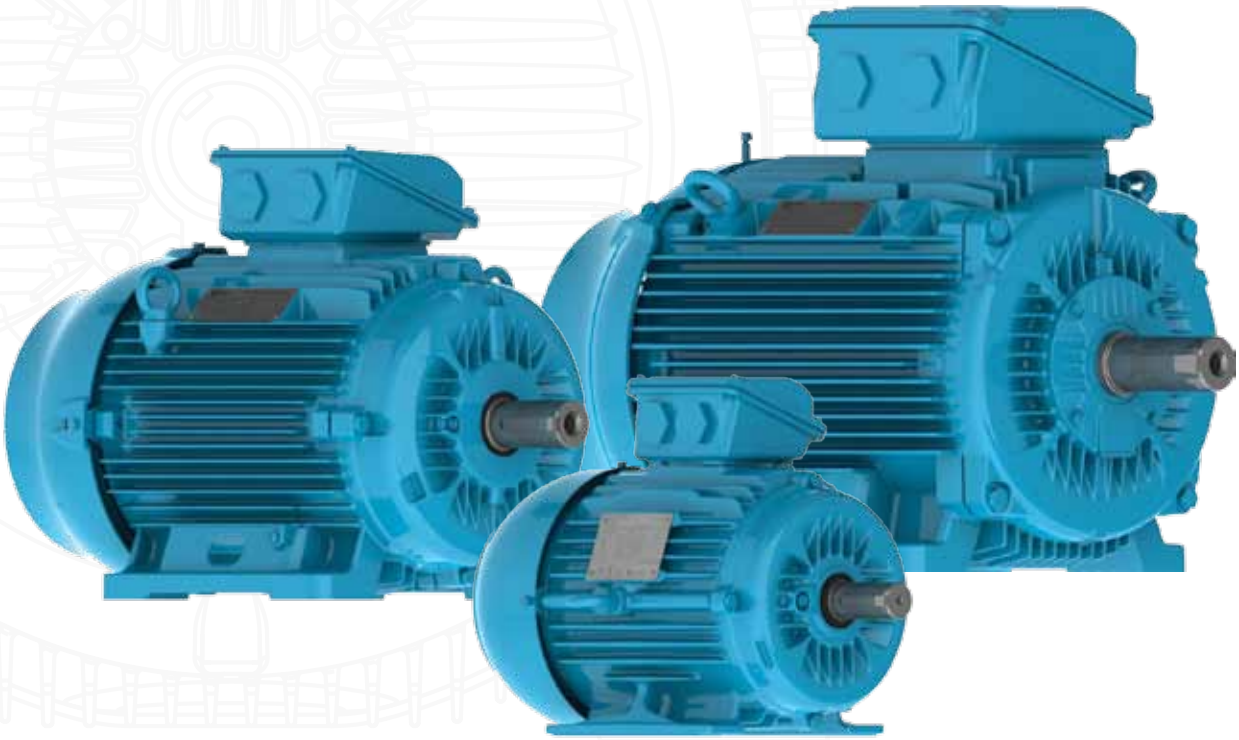

21. Spare parts

General Information

The following information is required when purchasing of spare parts:

- Serial number and manufacturing date, both stamped in the nameplate
- Spare part description
- Codes shown are for reference only. Final codes of spare parts will depend on colour

Spare Parts Available 63-112

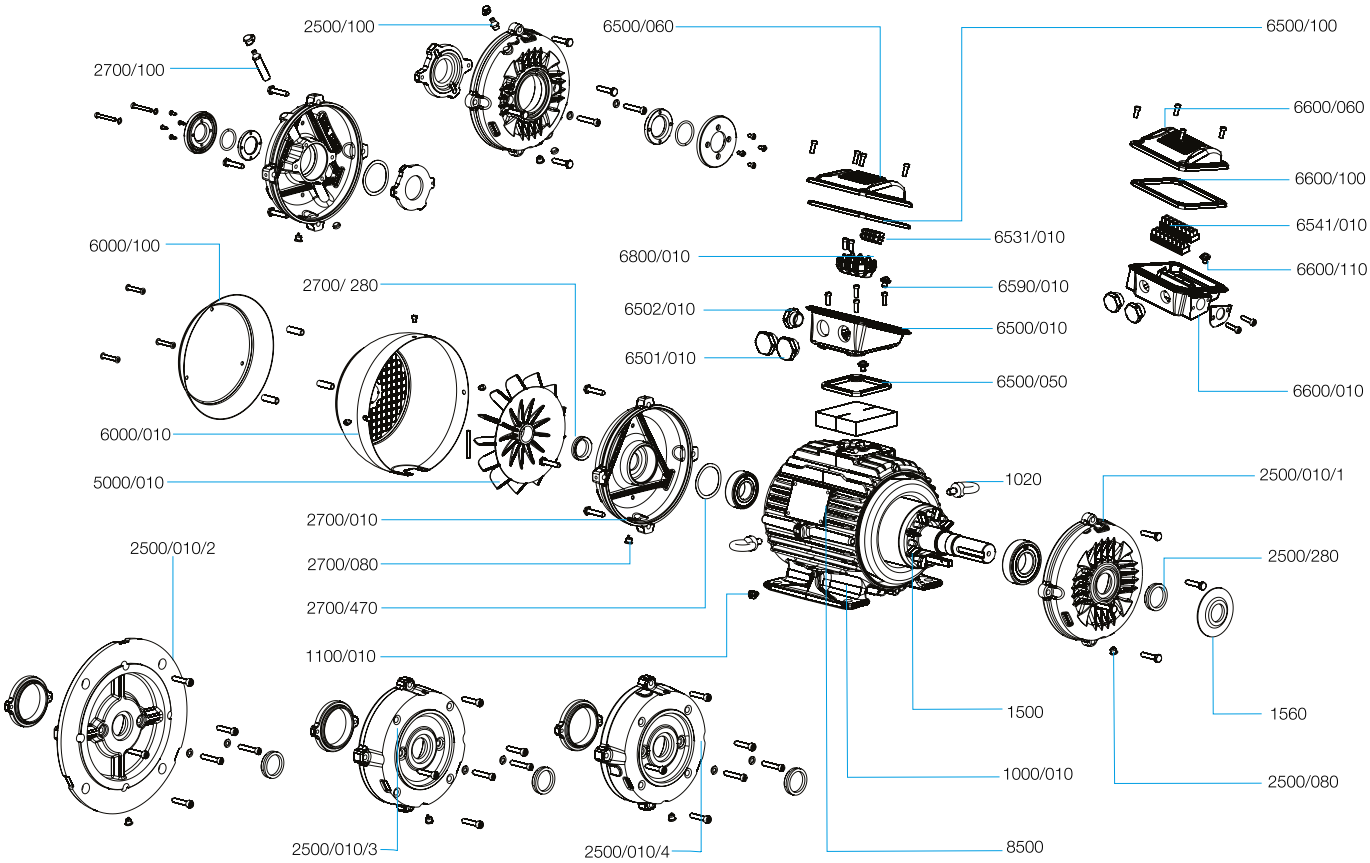

Motor component		Spare part	
Item	Description	Item	Composition
1000/010	Frame with wound stator		
1020	Lifting eyebolt	1020	Lifting eyebolt
1100/010	Earthing terminal		
1500	Rotor, complete with shaft and key		
1560	Slinger	1560	Slinger (recommended for vertical shaft up applications, non-flange mounted)
2500/010/1	Endshield, drive end	2500/1	Endshield, drain plug, shaft seal, bolts and washers
2500/080	Drain plug, drive end		
2500/100	Grease nipple, drive end (2)		
2500/280	Shaft seal, drive end (1)		
2500/010/2	FF Flange	2500/2	FF Flange, drain plug, shaft seal, bolts and washers
2500/080	Drain plug, drive end		
2500/100	Grease nipple, drive end (2)		
2500/280	Shaft seal, drive end (1)		
2500/010/3	C Flange (5)	2500/3	C Flange, drain plug, shaft seal, bolts and washers
2500/080	Drain plug, drive end		
2500/100	Grease nipple, drive end (2)		
2500/280	Shaft seal, drive end (1)		
2500/010/4	C-DIN Flange (5)	2500/4	C-DIN Flange, drain plug, shaft seal, bolts and washers
2500/080	Drain plug, drive end		
2500/100	Grease nipple, drive end (2)		
2500/280	Shaft seal, drive end (1)		
2700/010	Endshield, non-drive end	2700	Endshield, drain plug, shaft seal, bolts and washers
2700/080	Drain plug, non-drive end		
2700/100	Grease nipple, non-drive end (2)		
2700/280	Shaft seal, non-drive end (1)		
2700/470	Wave washer for axial displacement		
5000/010	Fan	5000	Fan (3)
6000/010	Fan cover (4)	6000	Fan cover, bolts
		6050	Fan cover, drip cover and bolts
6000/100	Drip cover	6100	Drip cover, bolts
6500/010	Terminal box	6500	Terminal box complete with lid, gaskets (for lid and terminal box), plugs (for mains and accessories), earthing terminal, bolts and washers
6500/050	Terminal box gasket		
6500/060	Terminal box lid		
6500/100	Terminal box lid gasket		
6501/010	Terminal box plug for main leads		
6502/010	Terminal box plug for accessory leads		
6590/010	Terminal box earthing terminal		
6531/010	Accessory connector	6531	Accessory connector, mounting rail, bolts and washers
6541/010	Accessory connector	6541	Accessory connector, mounting rail, bolts and washers
6600/010	Accessory terminal box	6600	Accessory terminal box, complete with lid, gasket, plugs, earthing terminal, bolts and washers
6600/060	Accessory terminal box lid		
6600/100	Accessory terminal box lid gasket		
6600/110	Accessory terminal box earthing terminal		
6800/010	Terminal block	6800	Terminal block, bolts and washers
8500	Main nameplate		

Notes:
(1) The shaft sealing may vary with product line. As a spare part, the shaft sealing in the 63-112 range will be supplied as an integral part of the endshield kit. If fitted with labyrinth seal, taconite or W3 Seal®, available from 90 frame upwards.
(2) When fitted with grease nipple, the endshield spare part kit will also have grease relief, internal bearing cap and laryrinth seal (taconite or W3 Seal®).
(3) When non-plastic fan is fitted, the spare part kit is also supplied with key and circlip for fan assembly onto the shaft.
(4) The fan cover material may vary with product line. Considering general purpose, it is steel fabricated in the 63-112 frame.
(5) C flange dimensions according to NEMA MG1 Part 4 standard or DIN.

Spare Parts Available 132-200

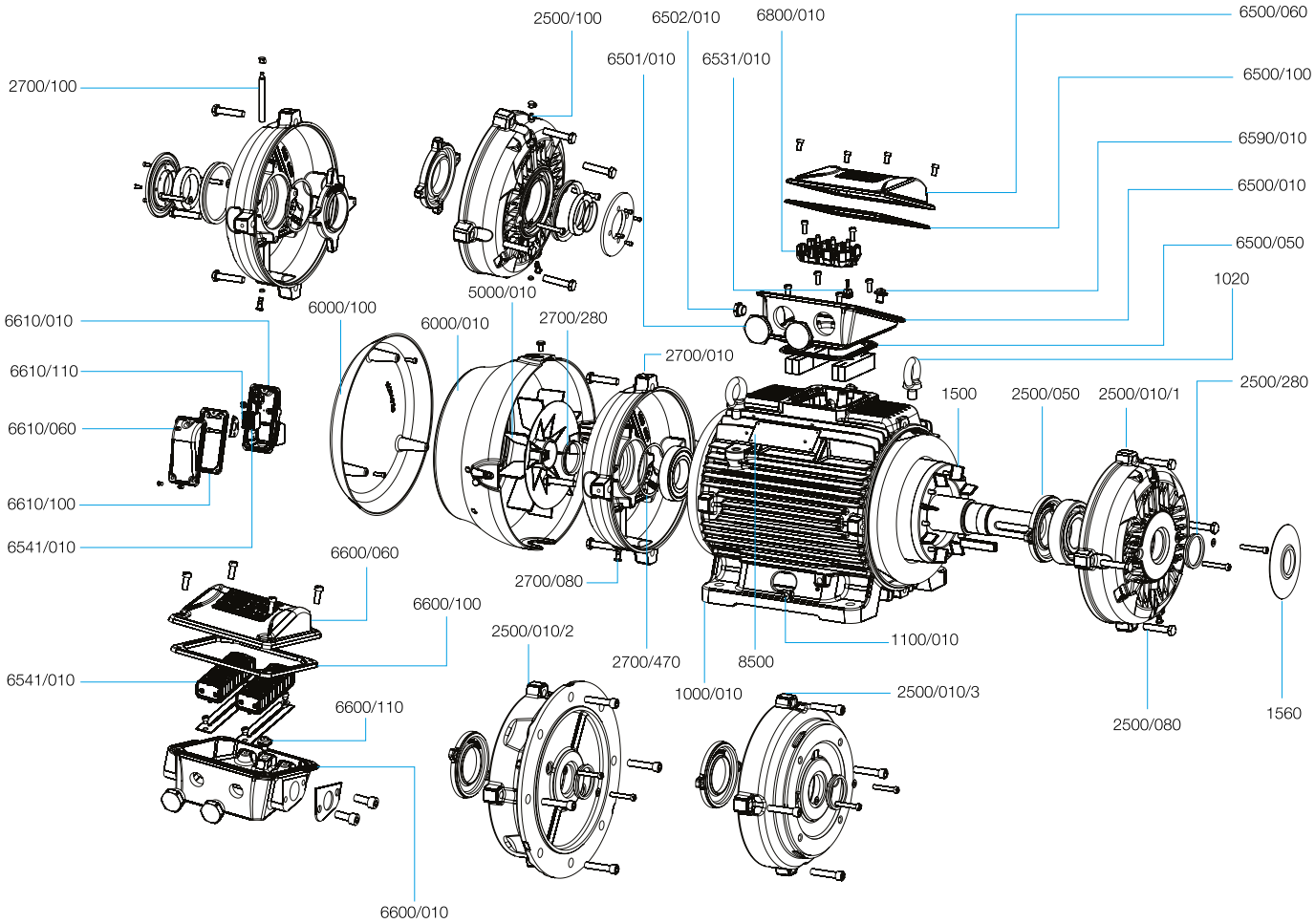

Motor component		Spare part	
Item	Description	Item	Composition
1000/010	Frame with wound stator		
1020	Lifting eyebolt	1020	Lifting eyebolt
1100/010	Earthing terminal		
1500	Rotor, complete with shaft and key		
1560	Slinger	1560	Slinger (recommended for vertical shaft up applications, non-flange mounted)
2500/010/1	Endshield, drive end	2500/1	Endshield, bearing cap, drain plug, shaft seal, bolts and washers
2500/050	Bearing cap, internal, drive end		
2500/080	Drain plug, drive end		
2500/280	Shaft seal, drive end (1)		
2500/100	Grease nipple, drive end (2)		
2500/010/2	FF Flange	2500/2	FF Flange, drain plug, shaft seal, bolts and washers
2500/080	Drain plug, drive end		
2500/100	Grease nipple, drive end (2)		
2500/280	Shaft seal, drive end (1)		
2500/010/3	C Flange (7)	2500/3	C Flange, drain plug, shaft seal, bolts and washers
2500/080	Drain plug, drive end		
2500/280	Shaft seal, drive end (1)		
2500/100	Grease nipple, drive end (2)		
2700/010	Endshield, non-drive end	2700	Endshield, drain plug, shaft seal, bolts and washers
2700/080	Drain plug, non-drive end		
2700/100	Grease nipple (with extensor pipe), non-drive end (4)		
2700/280	Shaft seal, non-drive end (1)		
2700/470	Wave washer for axial displacement (3)		
5000/010	Fan	5000	Fan (5)
6000/010	Fan cover (6)	6000	Fan cover, bolts
		6050	Fan cover, drip cover and bolts
6000/100	Drip cover	6100	Drip cover and bolts
6500/010	Terminal box	6500	Terminal box, complete with lid, gaskets (for lid and terminal box), plugs (for mains and accessories), earthing terminal, bolts and washers
6500/050	Terminal box gasket		
6500/060	Terminal box lid		
6500/100	Terminal box lid gasket		
6501/010	Terminal box plug for main leads		
6502/010	Terminal box plug for accessory leads		
6590/010	Terminal box earthing terminal		
6531/010	Accessory connector	6531	Accessory connector, mounting rail, bolts and washers
6541/010	Accessory connector	6541	Accessory connector, mounting rail, bolts and washers
6600/010	Accessory terminal box	6600	Accessory terminal box, complete with lid, gasket, plugs, earthing terminal, bolts and washers
6600/060	Accessory terminal box lid		
6600/100	Accessory terminal box lid gasket		
6600/110	Accessory terminal box earthing terminal		
6610/010	Space heater accessory terminal box	6610	Space heater accessory terminal box, complete with lid, gasket, plugs, earthing terminal, bolts and washers
6610/060	Space heater accessory terminal box lid		
6610/100	Space heater accessory terminal box lid gasket		
6610/110	Space heater accessory terminal box earthing terminal		
6800/010	Terminal block	6800	Terminal block, bolts and washers
8500	Main nameplate		

Notes:
(1) The shaft seal may vary with product line. As a spare part. the shaft seal in the 132-300 range will be supplied as an integral part of the endshield kit. If fitted with labyrinth seal (taconite or W3 Seal) internal bearing cap is mandatory from frame 160.
(2) When fitted with grease nipple. the endshield spare part kit will also have grease relief.
(3) Valid when ball bearing is fitted in drive end. When the drive end is fitted with roller bearings. the wave washer is not supplied (non-drive end bearing locked with internal bearing cap).
(4) When fitted with grease nipple in the non-drive end. the endshield spare part kit will also have grease relief and internal bearing cap.
(5) When non-plastic fan is fitted. the spare part kit is also supplied with key and circlip for fan assembly onto the shaft.
(6) The fan cover material may vary with product line. Considering general purpose. it is cast iron in the 160-200 range and steel fabricated to 132 frame.
(7) C flange dimensions according to NEMA MG1 Part 4 standard in the 132-200 range and according to DIN to 132 frame.

Spare Parts Available 225 - 355

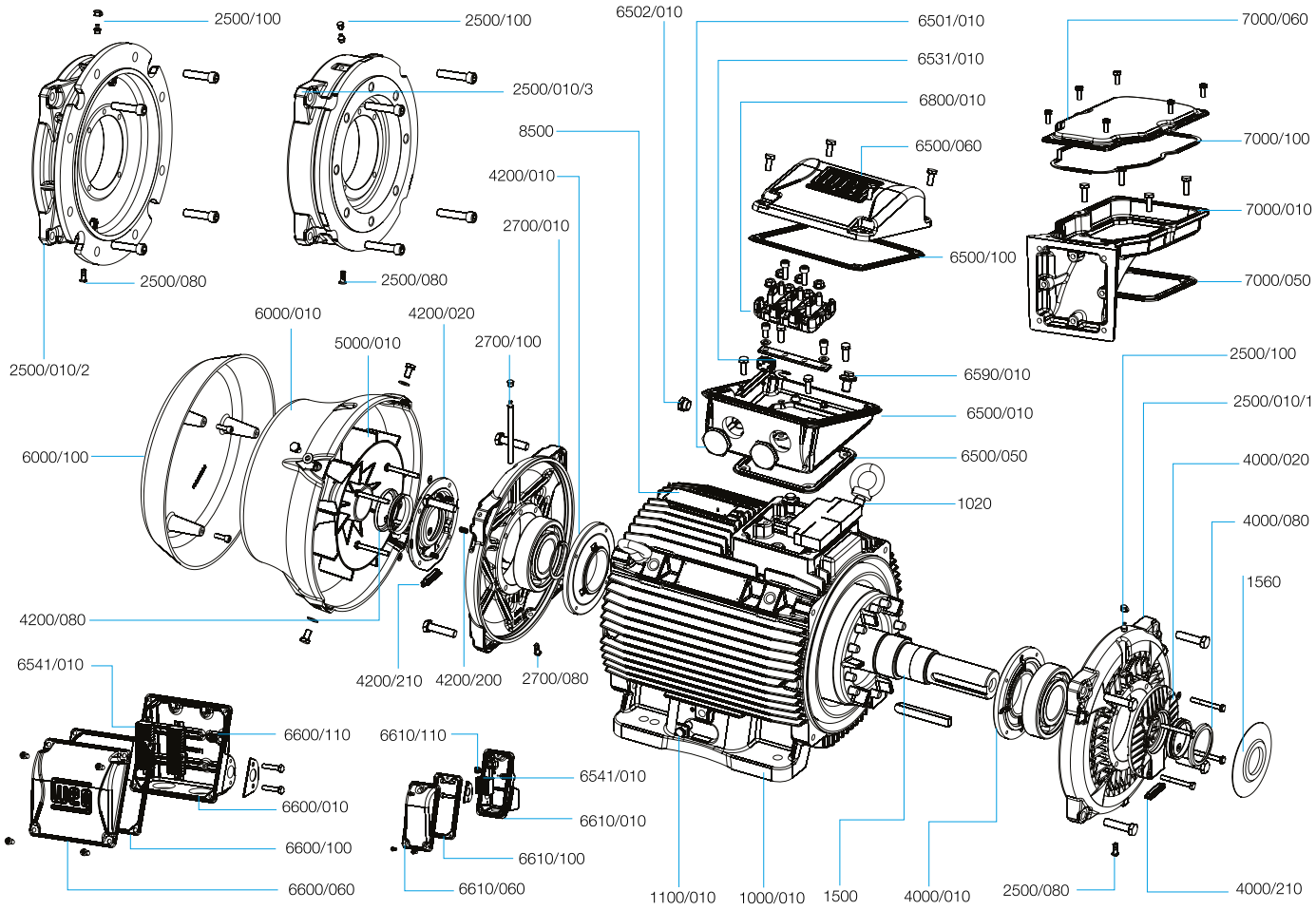

Motor component		Spare part	
Item	Description	Item	Composition
1000/010	Frame with wound stator		
1020	Lifting eyebolt	1020	Lifting eyebolt
1100/010	Earthing terminal		
1500	Rotor, complete with shaft and key		
1560	Slinger	1560	Slinger
2500/010/1	Endshield, drive end	2500/1	Endshield, grease nipple, drain plug, bolts and washers
2500/080	Drain plug, drive end		
2500/100	Grease nipple, drive end		
2500/010/2	FF Flange	2500/2	FF Flange, grease nipple, drain plug, bolts and washers
2500/080	Drain plug, drive end		
2500/100	Grease nipple, drive end		
2500/010/3	C Flange (5)	2500/3	C Flange, grease nipple, drain plug, bolts and washers
2500/080	Drain plug, drive end		
2500/100	Grease nipple, drive end		
2700/010	Endshield, non-drive end	2700	Endshield, grease nipple with extensor pipe, drain plug, bolts and washers
2700/080	Drain plug, non-drive end		
2700/100	Grease nipple (with extensor pipe), non-drive end		
4000/010	Bearing cap, internal, drive end	4000	Bearing cap (external and internal), shaft seal, grease relief, bolts and washers
4000/020	Bearing cap, external, drive end		
4000/080	Shaft seal, drive end (1)		
4000/210	Grease relief		
4200/010	Bearing cap, internal, non-drive end	4200	Bearing cap (external and internal), shaft seal, grease relief with extensor pipe, pre-load springs, bolts and washers
4200/020	Bearing cap, external, non-drive end		
4200/080	Shaft seal, non-drive end (1)		
4200/200	Pre-load springs for axial displacement (2)		
4200/210	Grease relief		
5000/010	Fan	5000	Fan (3)
6000/010	Fan cover, cast iron	6000	Fan cover, bolts
		6050	Fan cover, drip cover and bolts
6000/100	Drip cover	6100	Drip cover and bolts
6500/010	Terminal box	6500	Terminal box, complete with lid, gaskets (for lid and terminal box), plugs (for mains and accessories), earthing terminal, bolts and washers
6500/050	Terminal box gasket		
6500/060	Terminal box lid		
6500/100	Terminal box lid gasket		
6501/010	Terminal box plug for main leads		
6502/010	Terminal box plug for accessory leads		
6590/010	Terminal box earthing terminal		
6531/010	Accessory connector	6531	Accessory connector, mounting rail, bolts and washers
6541/010	Accessory connector	6541	Accessory connector, mounting rail, bolts and washers
6600/010	Accessory terminal box	6600	Accessory terminal box, complete with lid, gasket, plugs, earthing terminal, bolts and washers
6600/060	Accessory terminal box lid		
6600/100	Accessory terminal box lid gasket		
6600/110	Accessory terminal box earthing terminal		
6610/010	Space heater accessory terminal box	6610	Space heater accessory terminal box, complete with lid, gasket, plugs, earthing terminal, bolts and washers
6610/060	Space heater accessory terminal box lid		
6610/100	Space heater accessory terminal box lid gasket		
6610/110	Space heater accessory terminal box earthing terminal		
6800/010	Terminal block	6800	Terminal block, mounting rail, bolts and washers
7000/010	Terminal box adaptor base	7000	Terminal box adaptor for side mounted position, complete with lid, gaskets, bolts and washers
7000/050	Terminal box adaptor base gasket		
7000/060	Terminal box adaptor lid		
7000/100	Terminal box adaptor lid gasket		
8500	Main nameplate (4)		

Notes:
(1) The shaft sealing may vary with product line. As a spare part. the shaft sealing in the 225-355 range will be supplied as an integral part of the bearing cap kit.
(2) Valid when ball bearing is fitted in drive end. When the drive end is fitted with roller bearings. pre-load springs are not supplied (non-drive end bearing locked).
(3) When non-plastic fan is fitted. the spare part kit is also supplied with key and circlip for fan assembly onto the shaft.
(4) Main nameplate position will vary with terminal box configuration (top and side mounting)
(5) C flange dimensions according to NEMA MG1 Part 4 standard.

Notes

Notes

WEG Worldwide Operations

ARGENTINA
WEG EQUIPAMIENTOS ELECTRICOS S.A.
(Headquarters San Francisco-Cordoba)
Sgo. Pampiglione 4849
Parque Industrial San Francisco
2400 - San Francisco
Phone(s): +54 (3564) 421484
Fax: +54 (3564) 421459
info-ar@weg.net
www.weg.net/ar

AUSTRALIA
WEG AUSTRALIA PTY. LTD.
3 Dalmore Drive
Carribean Park Industrial Estate
Scoresby VIC 3179 - Melbourne
Phone(s): 61 (3) 9765 4600
Fax: 61 (3) 9753 2088
info-au@weg.net
www.weg.net/au

BELGIUM
WEG BENELUX S.A.
Rue de l'Industrie 30 D,
1400 Nivelles
Phone(s): + 32 (67) 88-8420
Fax: + 32 (67) 84-1748
info-be@weg.net
www.weg.net/be

CHILE
WEG CHILE S.A.
Los Canteros 8600
La Reina - Santiago
Phone(s): (56-2) 784 8900
Fax: (56-2) 784 8950
info-cl@weg.net
www.weg.net/cl

CHINA
WEG (NANTONG) ELECTRIC MOTOR MANUFACTURING CO., LTD.
No. 128# - Xinkai South Road,
Nantong Economic &
Technical Development Zone,
Nantong, Jiangsu Province.
Phone(s): (86) 0513-85989333
Fax: (86) 0513-85922161
info-cn@weg.net
www.weg.net/cn

COLOMBIA
WEG COLOMBIA LTDA
Calle 46A N82 - 54
Portería II - Bodega 7 - San Cayetano II - Bogotá
Phone(s): (57 1) 416 0166
Fax: (57 1) 416 2077
info-co@weg.net
www.weg.net/co

DENMARK
WEG SCANDINAVIA DENMARK
Sales Office of WEG
Scandinavia AB
Anelysparken 43B
True
8381 Tilst – Denmark
Phone: +45 86 24 22 00
Fax : +45 86 24 56 88
info-se@weg.net
www.weg.net/se

FRANCE
WEG FRANCE SAS
ZI de Chenes – Le Loup
13 Rue du Morellon – BP 738
38297 Saint Quentin Fallavier
Phone(s): +33 (0) 4 74 99 11 35
Fax: +33 (0) 4 74 99 11 44
info-fr@weg.net
www.weg.net/fr

GERMANY
WEG GERMANY GmbH
Industriegebiet Türnich 3
Geigerstraße 7
50169 Kerpen-Türnich
Phone(s): +49 (0)2237/9291-0
Fax: +49 (0)2237/9292-200
info-de@weg.net
www.weg.net/de

INDIA
WEG Electric (India) Pvt. Ltd.
#38, Ground Floor, 1st Main Road, Lower Palace Orchards,
Bangalore – 560 003
Phone(s): +91-80-4128 2007
+91-80-4128 2006
Fax: +91-80-2336 7624
info-in@weg.net
www.weg.net/in

ITALY
WEG ITALIA S.R.L.
V.le Brianza 20 - 20092 - Cinisello Balsamo - Milano
Phone(s): (39) 02 6129-3535
Fax: (39) 02 6601-3738
info-it@weg.net
www.weg.net/it

JAPAN
WEG ELECTRIC MOTORS JAPAN CO., LTD.
Yokohama Sky Building 20F,
2-19-12 Takashima,
Nishi-ku, Yokohama City,
Kanagawa, Japan 220-001
Phone: (81) 45 440 6063
info-jp@weg.net
www.weg.net/jp

MEXICO
WEG MEXICO, S.A. DE C.V.
Carretera Jorobas-Tula Km. 3.5,
Manzana 5, Lote 1
Fraccionamiento Parque Industrial - Huehuetoca,
Estado de México - C.P. 54680
Phone(s): + 52 (55) 5321 4275
Fax: + 52 (55) 5321 4262
info-mx@weg.net
www.weg.net/mx

NETHERLANDS
WEG NETHERLANDS
Sales Office of
WEG Benelux S.A.
Hanzepoort 23C
7575 DB Oldenzaal
Phone(s): +31 (0) 541-571080
Fax: +31 (0) 541-571090
info-nl@weg.net
www.weg.net/nl

PORTUGAL
WEG EURO - INDÚSTRIA ELÉCTRICA, S.A.
Rua Eng. Frederico Ulrich
Apartado 6074
4476-908 - Maia
Phone(s): +351 229 477 705
Fax: +351 229 477 792
info-pt@weg.net
www.weg.net/pt

RUSSIA
WEG RUSSIA
Russia, 194292, St. Petersburg,
Prospekt Kultury 44, Office 419
Phone(s): +7(812)363-21-72
Fax: +7(812)363-21-73
info-ru@weg.net
www.weg.net/ru

SPAIN
WEG IBERIA S.L.
Avenida de la Industria,25
28823 Coslada - Madrid
Phone(s) : (34) 916 553 008
Fax : (34) 916 553 058
info-es@weg.net
www.weg.net/es

SINGAPORE
WEG SINGAPORE PTE LTD
159, Kampong Ampat,
#06-02A KA PLACE.
Singapore 368328.
Phone(s): +65 6858 9081
Fax: +65 6858 1081
info-sg@weg.net
www.weg.net/sg

SWEDEN
WEG SCANDINAVIA AB
Box 10196
Verkstadgatan 9
434 22 Kungsbacka
Phone(s): (46) 300 73400
Fax: (46) 300 70264
info-se@weg.net
www.weg.net/se

UK
WEG ELECTRIC MOTORS (U.K.) LTD.
28/29 Walkers Road
Manorside Industrial Estate
North Moons Moat - Redditch
Worcestershire B98 9HE
Phone(s): 44 (0)1527 596-748
Fax: 44 (0)1527 591-133
info-uk@weg.net
www.weg.net/uk

UNITED ARAB EMIRATES
WEG MIDDLE EAST FZE
JAFZA – JEBEL ALI FREE ZONE
Tower 18, 19th Floor,
Office LB 18 1905
P.O. Box 262508 - Dubai
Phone: +971 (4) 8130800
Fax: +971 (4) 8130811
info-ae@weg.net
www.weg.net/ae

USA
WEG ELECTRIC CORP.
6655 Sugarloaf Parkway,
Duluth, GA 30097
Phone(s): 1-678-249-2000
Fax: 1-770-338-1632
info-us@weg.net
www.weg.net/us

VENEZUELA
WEG INDUSTRIAS VENEZUELA C.A.
Avenida 138-A
Edificio Torre Banco Occidental de Descuento, Piso 6 Oficina 6-12
Urbanizacion San Jose de Tarbes
Zona Postal 2001
Valencia, Edo. Carabobo
Phone(s): (58) 241 8210582
(58) 241 8210799
(58) 241 8211457
Fax: (58) 241 8210966
info-ve@weg.net
www.weg.net/ve

WEG Equipamentos Elétricos S.A.
International Division
Av. Prefeito Waldemar Grubba, 3000
89256-900 - Jaraguá do Sul - SC - Brazil
Phone: 55 (47) 3276-4002
Fax: 55 (47) 3276-4060
www.weg.net

50025712.09 - The values shown are subject to change without prior notice. The information is for reference only.